INSTALLATION AND OPERATING MANUAL

MASTERYS GP4

60-160 kVA

EN

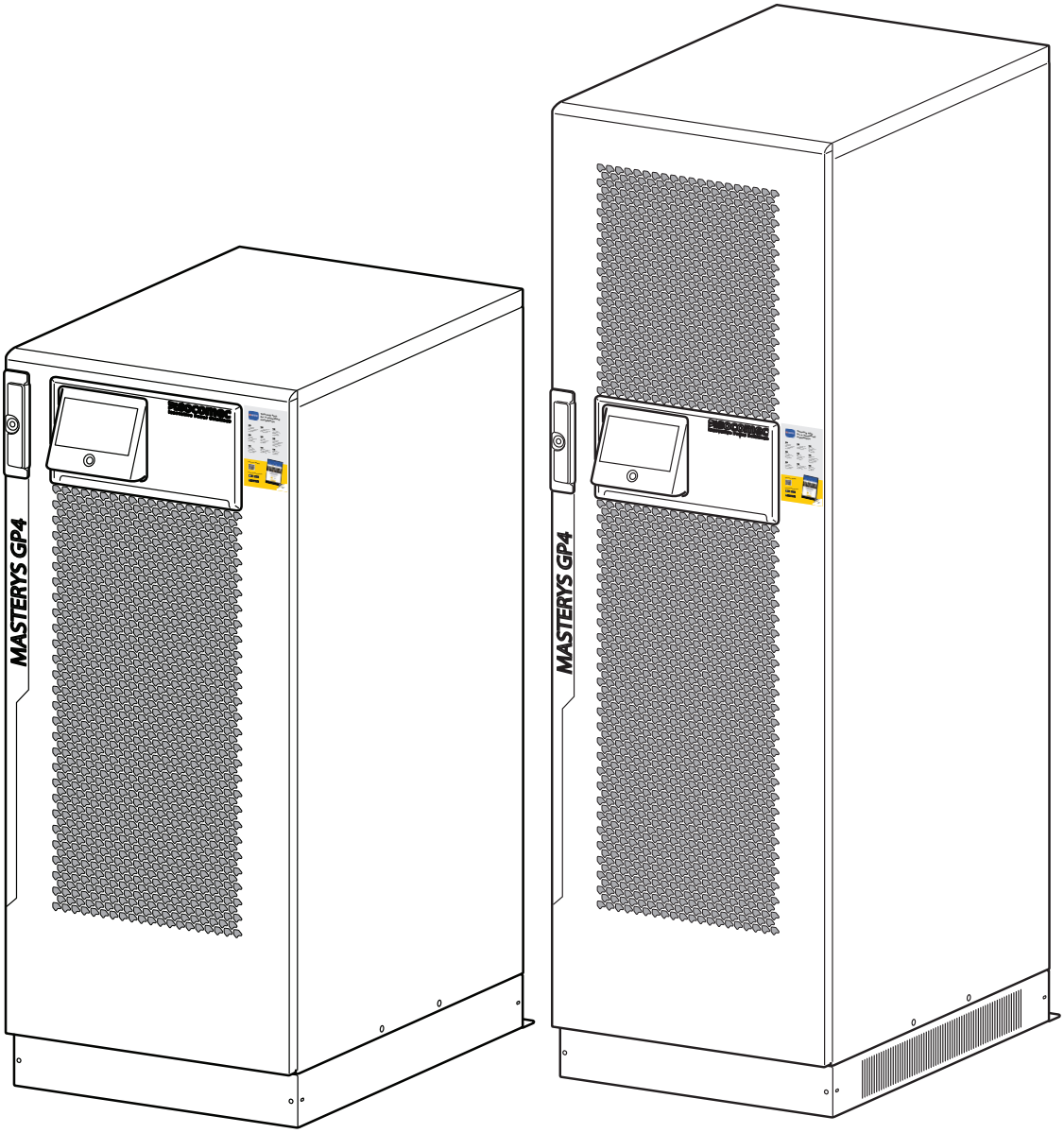

www.socomec.com

socomec
Innovative Power Solutions

CONTENTS

1. CERTIFICATE AND CONDITIONS OF WARRANTY

This SOCOMEC continuous power system is guaranteed against any manufacturing or material defects.

The warranty is valid for 12 (twelve) months from the commission date, provided activation is carried out by SOCOMEC personnel or personnel from a support centre authorised by SOCOMEC, and no more than 15 (fifteen) months from being shipped from SOCOMEC.

The warranty is valid throughout national territory. If the UPS is exported abroad, the warranty will only cover the parts used to repair faults.

The warranty is valid ex-works and covers labour and parts used to repair the faults.

The warranty shall not apply in the following cases:

- Failure due to unforeseen circumstances or force majeure (lightning, floods, etc.);
- Failure due to negligence or improper use (use outside limits: temperature, humidity, ventilation, electric power supply, applied load, batteries);
- Insufficient or inappropriate maintenance;
- When maintenance, repairs or modifications have not carried been out by SOCOMEC personnel, or personnel from a support centre authorised by SOCOMEC.
- If the battery has not been recharged in accordance with the terms indicated on the packaging and in the manual, in the event of long periods of storage or UPS inactivity.

SOCOMEC may, at its own discretion, opt for the repair of the product or the replacement of faulty or defective parts with new parts, or with used parts of equivalent quality to new parts with regard to function and performance.

Defective or faulty parts replaced free of charge must to be made available to SOCOMEC, which becomes the sole owner.

Replacement or repair of parts, or any modifications to the product during the warranty period, will not extend the duration of the warranty.

SOCOMEC will not be responsible for damages under any circumstances (including, without limitations, damage for loss of earnings, interruption of activity, loss of information or other financial losses) arising from the use of the product.

These conditions are subject to Italian law. Any disputes fall under the jurisdiction of the Court of Vicenza.

2. SAFETY STANDARDS

This user manual specifies installation and maintenance procedures, technical data and safety instructions for SOCOMEC. For further information visit the Socomec website: www.socomec.com.

	NOTE! Any work carried out on the equipment must be performed by skilled, qualified technicians.
	DANGER! Failure to observe safety standards could result in fatal accidents or serious injury, and damage equipment or the environment.
	CAUTION! If the unit is found to be damaged externally or internally, or any of the accessories are damaged or missing, contact SOCOMEC. Do not operate the unit if it has suffered a violent mechanical shock of any kind.
	NOTE! Install the unit in accordance with clearances in order to prevent access to handling devices and guarantee sufficient ventilation (refer to 'Environmental requirements' chapter).
	NOTE! Only use accessories recommended or sold by the manufacturer.
	NOTE! When the equipment is transferred from a cold to a warm place wait approx. two hours before putting the unit into operation.
	NOTE! When carrying out electrical installation, all standards applicable specified by the IEC, in particular IEC 60364, and the electricity supplier must be observed. All national standards applicable to batteries must be observed. For further information refer to 'Technical specifications' chapter.
	WARNING! Connect the protective earth (PE) conductor before making any other connections.
	NOTE! The installer is responsible for implementing the backfeed protection with the use of AC input line isolation devices external to the UPS. Refer to 'Electrical requirements' chapter.
	DANGER! RISK OF ELECTRIC SHOCK! Before carrying out any operations on the unit (cleaning and maintenance performances, connection of appliances, etc.) disconnect all power sources.
	DANGER! RISK OF ELECTRIC SHOCK! After disconnecting all power sources wait approx. 5 minutes for the complete discharge of the unit.
	NOTE! The UPS may be powered from an IT distribution system with a neutral conductor.
	NOTE! Any use other than the specified purpose will be considered improper. The manufacturer/supplier shall not be held responsible for damage resulting from this. Risk and responsibility lies with the system manager.

NOTE! The product you have chosen is designed for commercial and industrial use only. In order to be used for particular critical applications such as life support systems, medical applications, commercial transportation, nuclear facilities or any other application or systemwhere product failure is likely to cause substantial harm to people or property, the products may have to be adapted. For such uses we would advise you to contact SOCOMEC beforehand to confirm the ability of these products to meet the requested level of safety, performance, reliability and compliance with applicable laws, regulations and specifications.

⚠	NOTE! **This is a product for commercial and industrial application – installation restrictions or additional measures may be needed to prevent disturbances.**

Safety requirements for secondary batteries and battery installations.

⚠	**The installer is responsible for ensuring that the battery installation and their operating environment conform to national and international codes and safety standards.**

2.1 DESCRIPTION OF SYMBOLS

Symbols	Description
	Protective earth terminal (PE).
	Authorised personnel only. Only qualified personnel are permitted to work on the batteries.
	Do not use naked flames or cause sparks in the vicinity of the accumulators.
	No smoking.
	Batteries charging! Batteries and related parts contain lead which is dangerous to health if ingested. Wash hands after handling!
	Accumulators are heavy! Use suitable transport and lifting equipment to work safely.
	Risk of electric shock! Connecting accumulators in series creates hazardous voltages.
	Risk of explosion! Avoid short circuits! Never place tools or metal objects on the accumulators.
	Corrosive liquids (electrolyte).
	Read the user instructions carefully. Read the user manual before performing any operations.
	Wear protective gloves
	Wear safety shoes.
	Wear protective goggles.
	In the event of accidents, improper use, failure or electrolyte leakage wear a protective apron.
	In the event of accidents, improper use, failure or electrolyte leakage wear a gas mask.
	In the event of contact with the eyes, wash immediately with plenty of water and call a doctor. Call a doctor immediately in the event of accidents or illness.
	Do not dispose of in normal waste stream (symbol waste electrical and electronic equipment).

3. ENVIRONMENTAL REQUIREMENTS AND HANDLING

⚠	NOTE! Before carrying out any operations on the unit read the 'Safety standards' chapter carefully.

3.1 ENVIRONMENTAL REQUIREMENTS

The room must be:

- of a suitable size
- free from conductive, inflammable and corrosive items;
- not exposed directly to sunlight.

The floor must support the weight of the unit and guarantee its stability.The unit is designed for indoor installation only.

ROOM POSITIONING

For information regarding ambient temperature, dimensions and weights refer to the 'Technical specifications' chapter.

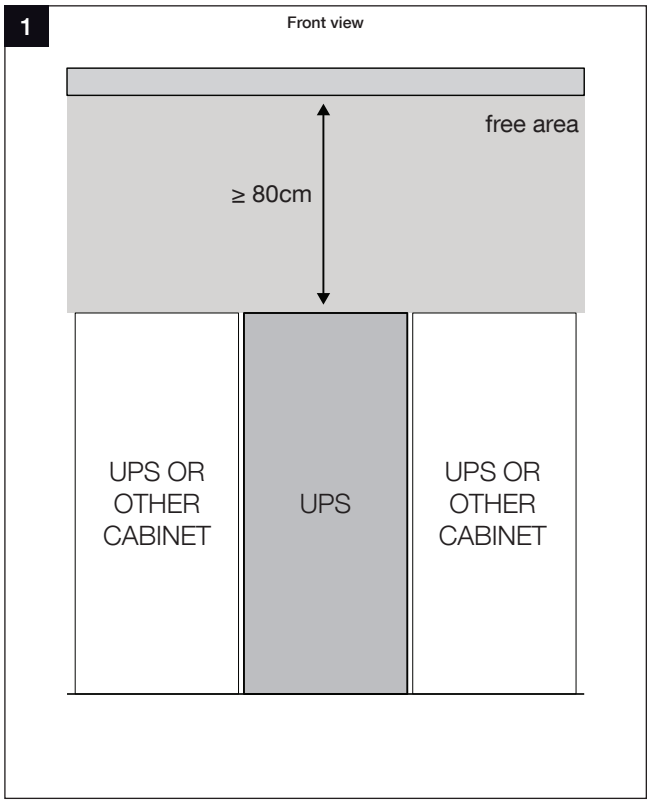

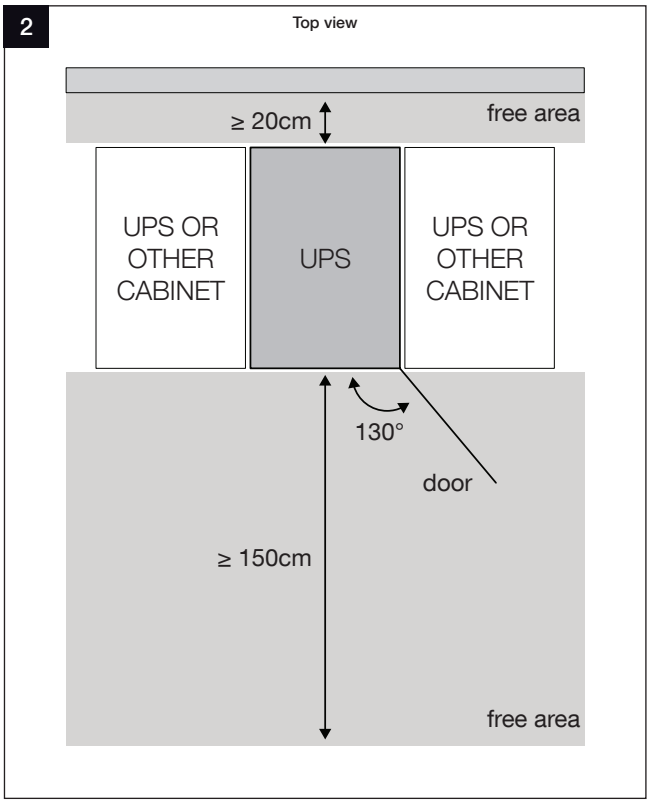

3.2 HANDLING

- The packaging guarantees the stability of the unit during shipping and physical transfer.
- The unit must remain in a vertical position during all shipping and handling operations.
- Ensure that the floor is strong enough to support the weight of the unit.
- Carry the packaged unit as close as possible to the installation site.

⚠	WARNING! HEAVY WEIGHT! Move the unit using a fork lift truck taking the utmost caution at all times.
⚠	The unit MUST be handled by at least two people. The people MUST take position at the sides of the UPS with respect to the direction of movement.
⚠	Do not move the unit by putting pressure on the front door.
⚠	When moving the unit on even slightly sloping surfaces, use the locking equipment and braking devices to ensure that the unit does not fall over.
⚠	WARNING! The following instructions must be carried out prior to moving the unit (after initial positioning). Failure to heed this warning could result in the unit falling over, equipment damage, injury and even death.

UNPACKING PROCEDURES

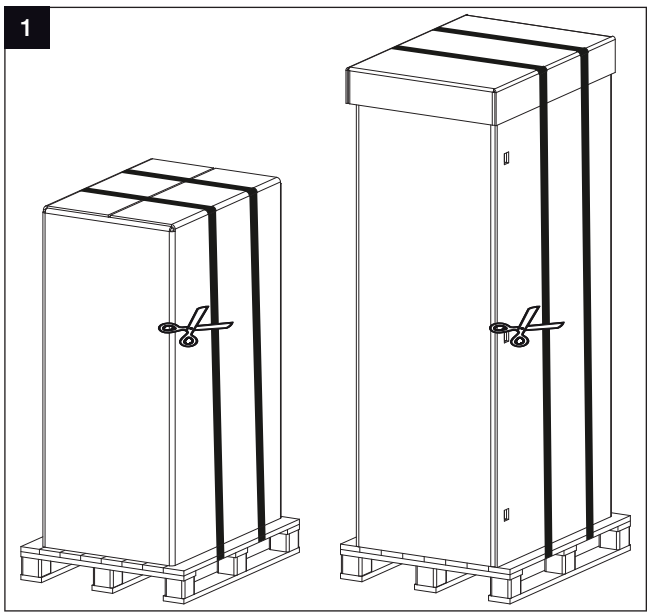

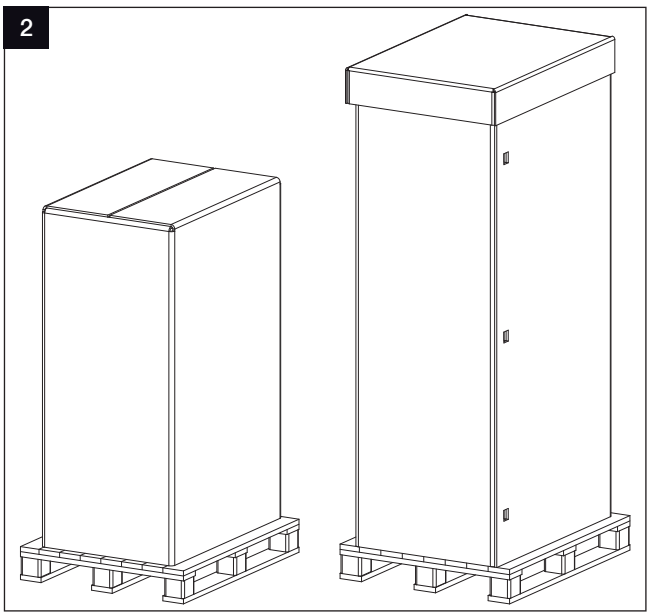

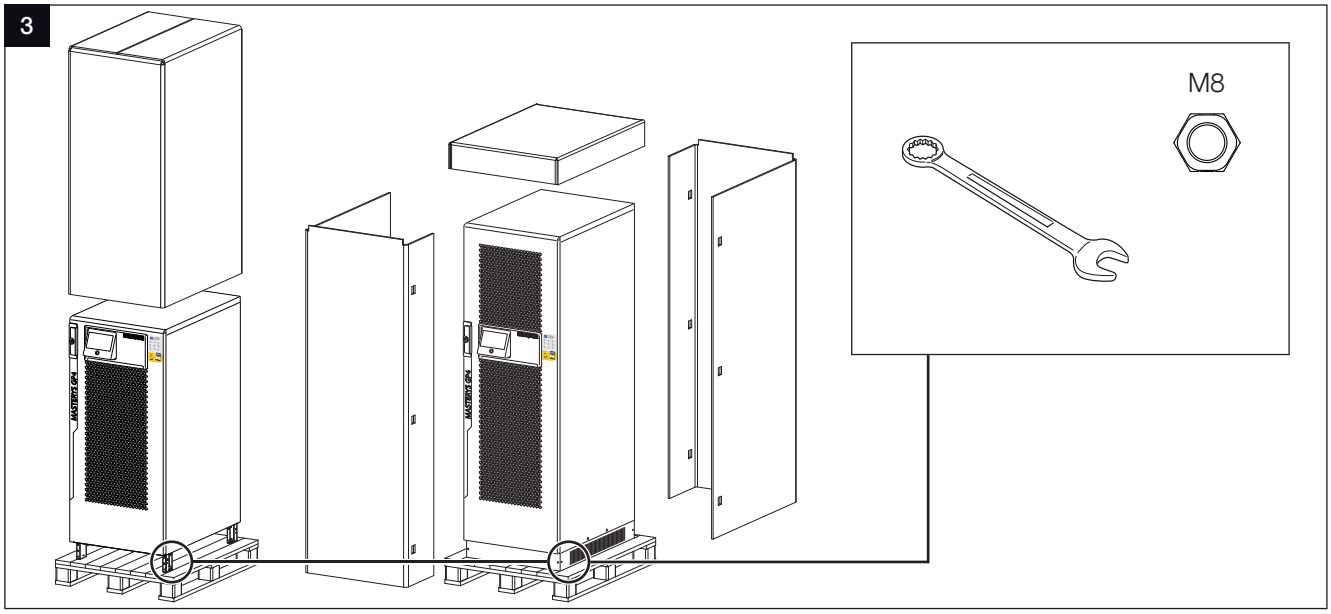

AVAILABLE TUTORING MOBILE APP INSTALLATION

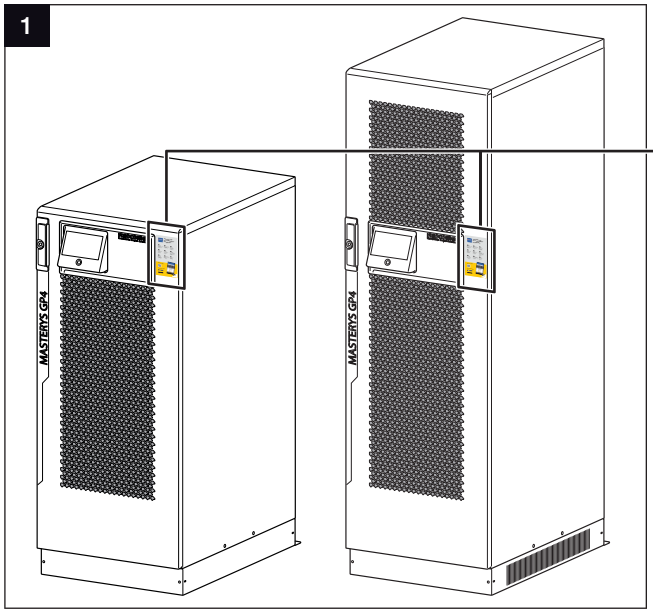

Discover **eWIRE**

Free download from

Download on the App Store

GET IT ON Google Play

Ask your Socomec dealer for your activation code.

Visit us at www.socomec.com for more info. (tool page).

4. ELECTRICAL INSTALLATION

4.1 UPS SINGLE CONFIGURATION

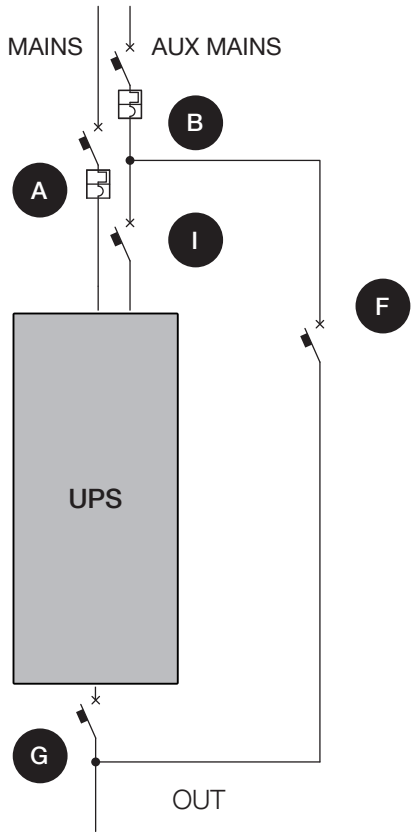

KEY

A	Input mains thermal-magnetic circuit breaker.
B	Auxiliary mains thermal-magnetic circuit breaker.
F[1]	External maintenance by pass switch.
G	Unit output switch.
I	Unit Auxiliary mains switch

1. *Connect a normally-closed early make contact from the External Maintenance bypass switch to the dedicated connector (if present) or to the ADC+SL board.*

4.2 UPS PARALLEL CONFIGURATION

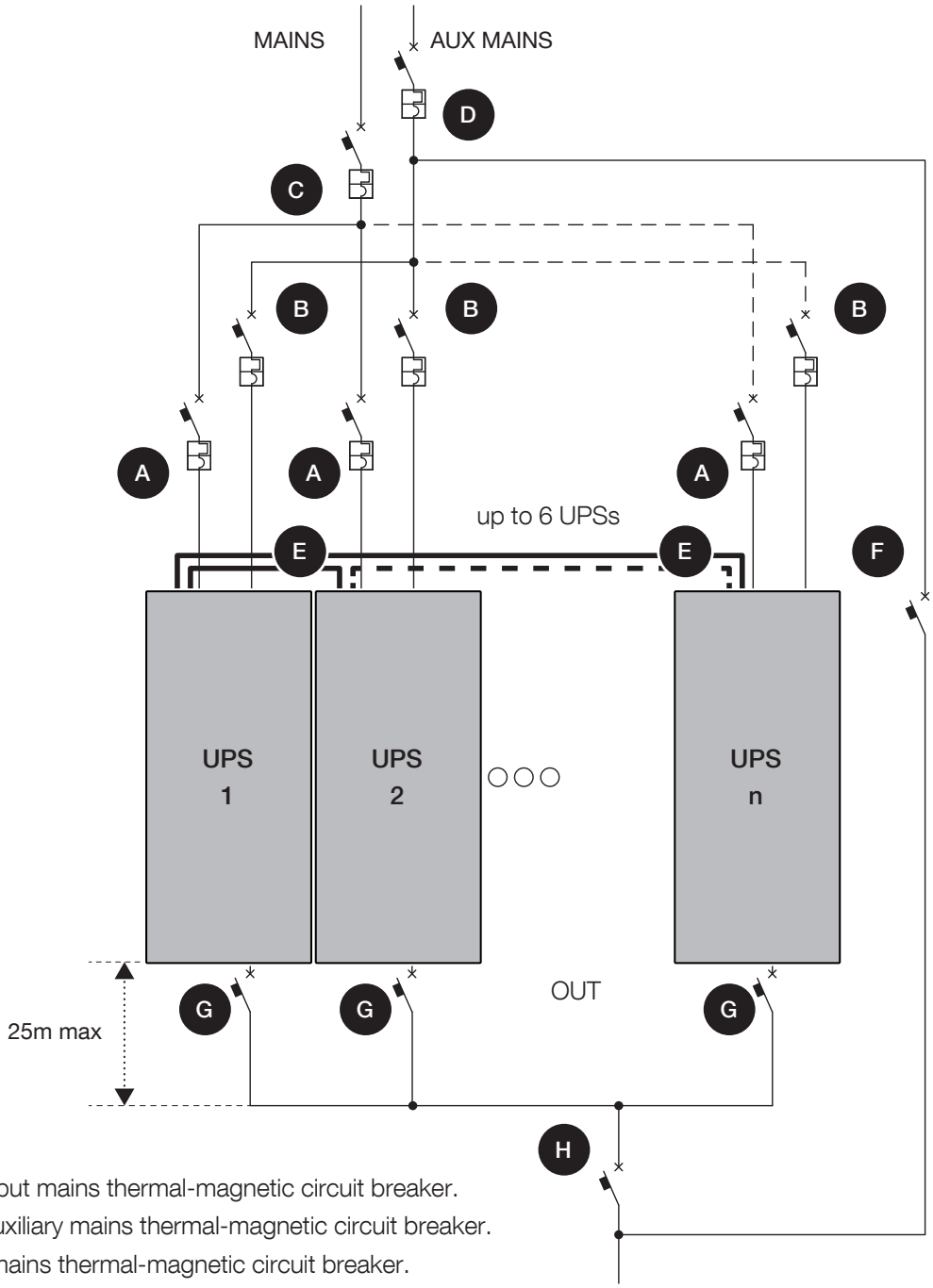

KEY

A	Unit Input mains thermal-magnetic circuit breaker.
B	Unit Auxiliary mains thermal-magnetic circuit breaker.
C	Input mains thermal-magnetic circuit breaker.
D	Auxiliary mains thermal-magnetic circuit breaker.
E	Parallel bus cable.
F(1)	External maintenance by pass switch.
G(1)	Unit output switch.
H(1)	System shutdown switch.

1. Connect signal status to the parallel board.

4.3 ELECTRICAL REQUIREMENTS

⚠	NOTE! **Before carrying out any operations on the unit read the 'Safety standards' chapter carefully.**

The installation and system must comply with national plant regulations.

The electrical distribution panel must have a sectioning and protection system installed for input and auxiliary mains.

RCD is not necessary when the UPS is installed in a TN-S system.

RCD is not allowed on TN-C systems.

If a RCD is required a B-type should be used.

Size of input protection devices						
Model rating	Input Mains Breaker[1]	Aux Mains Breaker[1]	Differential input	Input/Output cable core size[2]	Battery cable core size	Battery protection[4]
(kVA)	(A)	(A)	(A)	(mm^2)	(mm^2)	(A)
	A	B	selective type	Max[3]	Max[3]	
60	125	160	0.5	70	70	160
80	160	200	0.5	70	70	200
100	250	250	0.5	2 x 120	2 x 120	250
120	250	250	0.5	2 x 120	2 x 120	315
160	315	400	0.5	2 x 150	2 x 150	400

1. *Circuit breaker switch recommended with magnetic intervention threshold ≥10 In (curve C). It is necessary to use a D curve selective breaker if an optional external transformer is used.*
2. **For parallel configuration**, *cables shall have the same size and length for each unit (maximum length tolerance is ±5%). Output cables should be less than 25 metres.*
3. *Determined by the size of the terminals.*
4. *Tripole protection on external battery cabinet.*
   Recommended values to avoid unwanted tripping with UPS at full power, minimum battery voltage and backup time of at least 5 min. Recommended Rapid fuse type or thermal-magnetic circuit breaker with intervention threshold = 3 In suited for DC applications.

⚠	**CAUTION: Residual Current Detection (RCD) can only be used in the case of a common input and auxiliary mains (configuration not recommended). It has to be placed upstream of the connection between input mains and auxiliary mains. If RCD is installed the trigger value must be 0.5 A multiplied by the number of units connected in parallel.** **Use type B four-pole selective (S) residual current detectors. Load leakage currents are to be added to those generated by the UPS and during transitory phases (power failures and power returns) short current peaks may occur. If loads with high leakage current are present, adjust the residual current protection. It is advisable in all cases to carry out a preliminary check on the earth current leakage with the UPS installed and operational with the definitive load, so as to prevent the RCD tipping over.**
⚠	NOTE: **To ensure the integrity of the 60-80 kVA bypass thyristors, I^2t must be lower than 120 kA^2s and peak current must be lower than 5 kA for 20 ms.** **To ensure the integrity of the 100-160 kVA bypass thyristors, I^2t must be lower than 400 kA^2s and peak current must be lower than 9 kA for 20 ms.** **Contact SOCOMEC for detailed information.**
⚠	**The UPS is designed for transient overvoltages in category II installations. If the UPS is part of the building's electrical circuit, or is likely to be subject to transient overvoltages in category III installations, additional external protection must be provided, either on the UPS or in the AC power supply network powering the UPS.**
⚠	**The UPS is designed for indoor environmental service conditions according to IEC 60721-3-3 with pollution degree lower or equal to 2 (non-conductive pollution).**

⚠	WARNING: as specified in 62040-3 Appendix 3: Non-linear Load Reference, in the event of three-phase non-linear loads connected downstream of the UPS, the neutral current on the load can be 1.5 - 2 times higher than the phase current. This must be considered when estimating the correct size of the output and the auxiliary neutral cables.
⚠	WARNING: protective earthing conductor (PE) must have sufficient current-carrying capacity. The PE cable core size must be chosen according to the PROTECTIVE CURRENT RATING of the earth circuit which depends on the provision and location of protective overcurrent devices.
⚠	NOTE: 3-Phase 4-Wire Input Power is required. The unit can be installed in TN-C, TN-S, TT and IT AC distribution systems (IEC 60364-3).

ADDITIONAL REQUIREMENTS FOR PARALLEL CONFIGURATION

⚠	The UPS is designed for transient overvoltages in category II installations. If the UPS is part of a parallel configuration and the total output rated current is > 400 A, additional external protection must be provided.
⚠	The phase rotation of aux mains and output cables must be the same for each unit.
⚠	System shutdown switch H should always be installed in the external distribution cabinet and recognised as an emergency shutdown switch (red handle). If this switch is far from the UPS or in another room a remote shutdown button shall be installed near the UPS.
⚠	Before turning on an individual unit ensure that the relevant unit output switch G is closed.
⚠	Before opening unit output switch G ensure that the relevant unit is turned off.
⚠	If unit output switches G are present, it is advisable to connect a normally open early break contact from the switch to the unit's parallel board.
⚠	If an external maintenance bypass switch F is present, it is advisable to connect a normally closed early make contact from the switch to the parallel board of the concentrator unit.
⚠	If a system shutdown switch H is present, it is advisable to connect a normally closed early break contact from the switch to the parallel board of the concentrator unit.

4.3.1 BACKFEED PROTECTION

The UPS is set up for the installation of external protection devices against the backfeed of dangerous voltages, on both the input power supply line (MAINS SUPPLY) and on the auxiliary backup mains power supply line (AUX MAINS SUPPLY); these devices are controlled by means of the card shown in figure.

The current rating of the switching device has to follow the instruction outlined in 'Electrical requirements' chapter.

⚠	**DANGER! RISK OF ELECTRIC SHOCK!** **The installer must attach the warning label in order to warn electrical technicians about dangerous backfeed situations (not caused by the UPS).**

Warning label (supplied with the equipment)	Backfeed electrical diagram
Before working on this circuit - Isolate the Uninterruptible Power System (UPS) - Then check for Hazardous Voltage between all terminals including the protective earth **Risk of Voltage Backfeed**	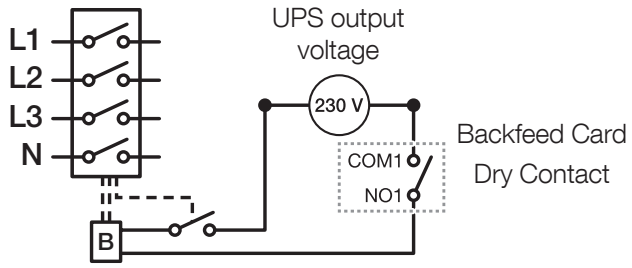

⚠	**NOTE: Use a 220-240 V trip coil with integrated travel limit contact to pilot the input/auxiliary protection systems. If a trip coil without an integrated end of travel contact is used, a normally open contact must be added. Electrical contact data: 1.6 A 250 V AC.**

As an option the unit can be delivered with the integrated internal backfeed switches. Refer to 'Standard features and option' chapter.

- Separated input mains

Activating UPS protection on the mimic panel: access the **MAIN MENU > SERVICE > UPS SETTINGS > MAINS CONFIGURATION > MAINS / AUXILIARY** and set the parameter to **SEPARATED**.

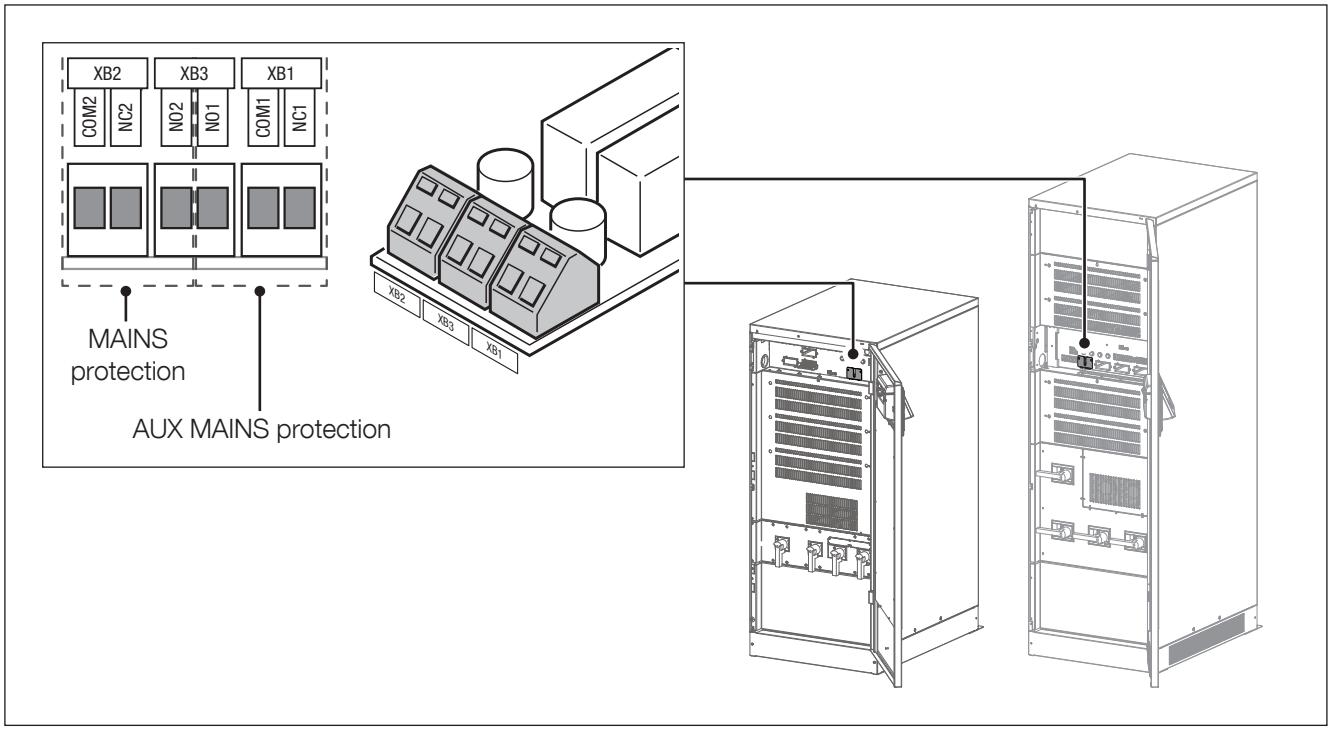

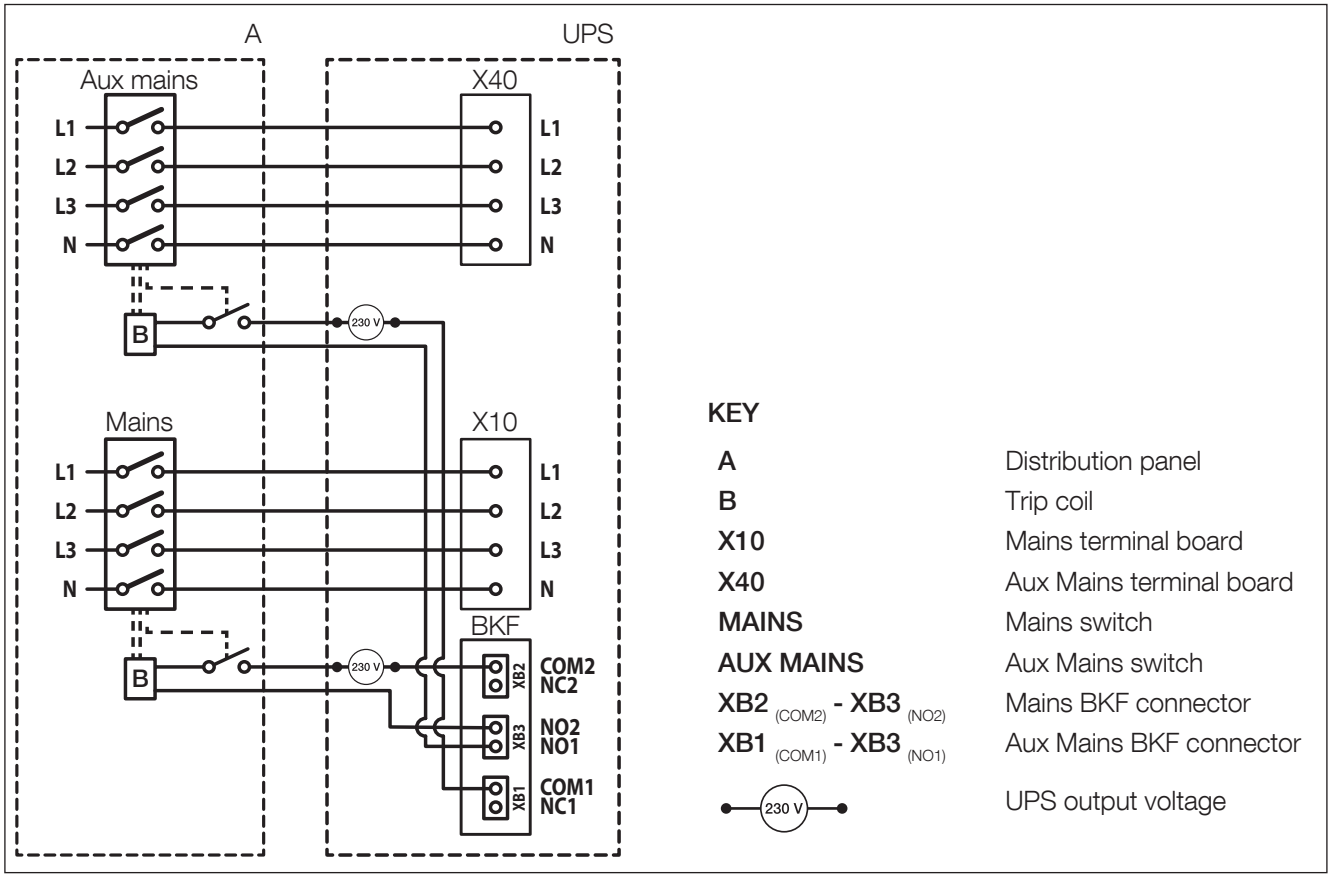

- Common input mains

Activating UPS protection on the mimic panel: access the **MAIN MENU > SERVICE > UPS SETTINGS > MAINS CONFIGURATION > MAINS / AUXILIARY** and set the parameter to **COMMON**.

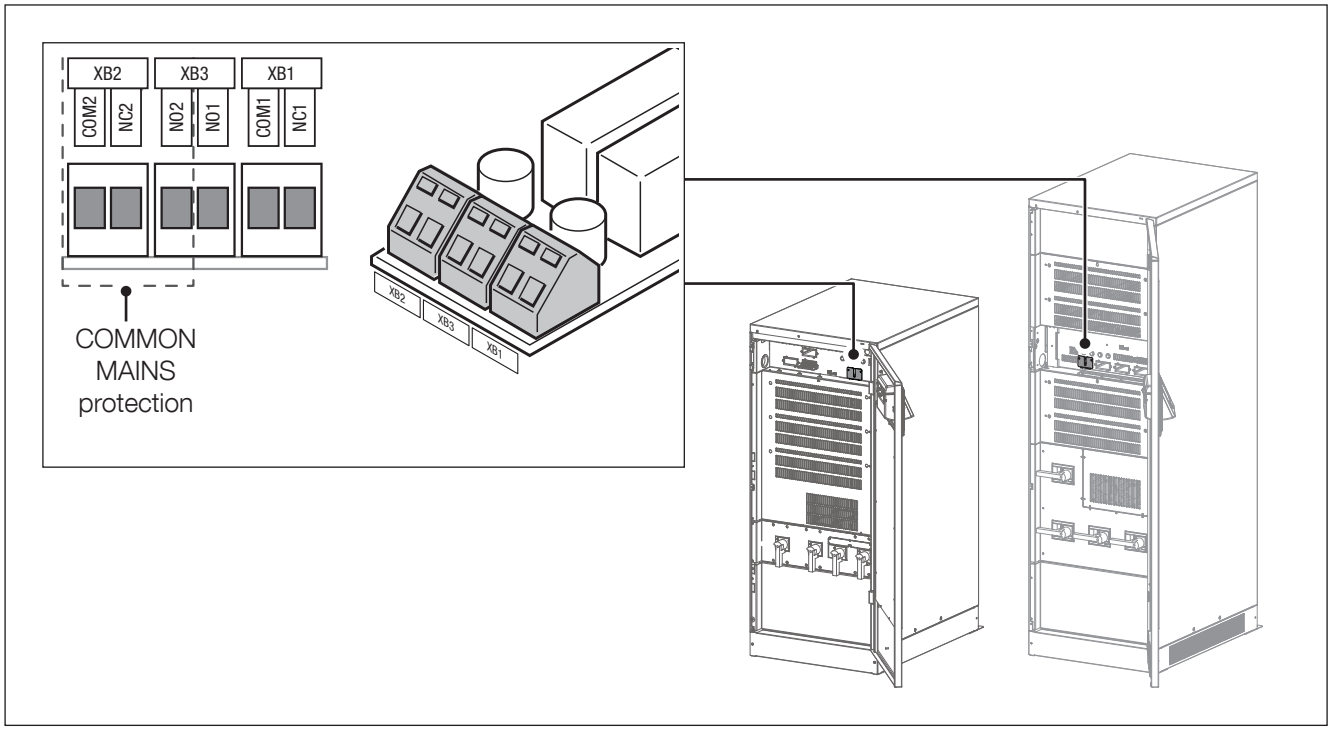

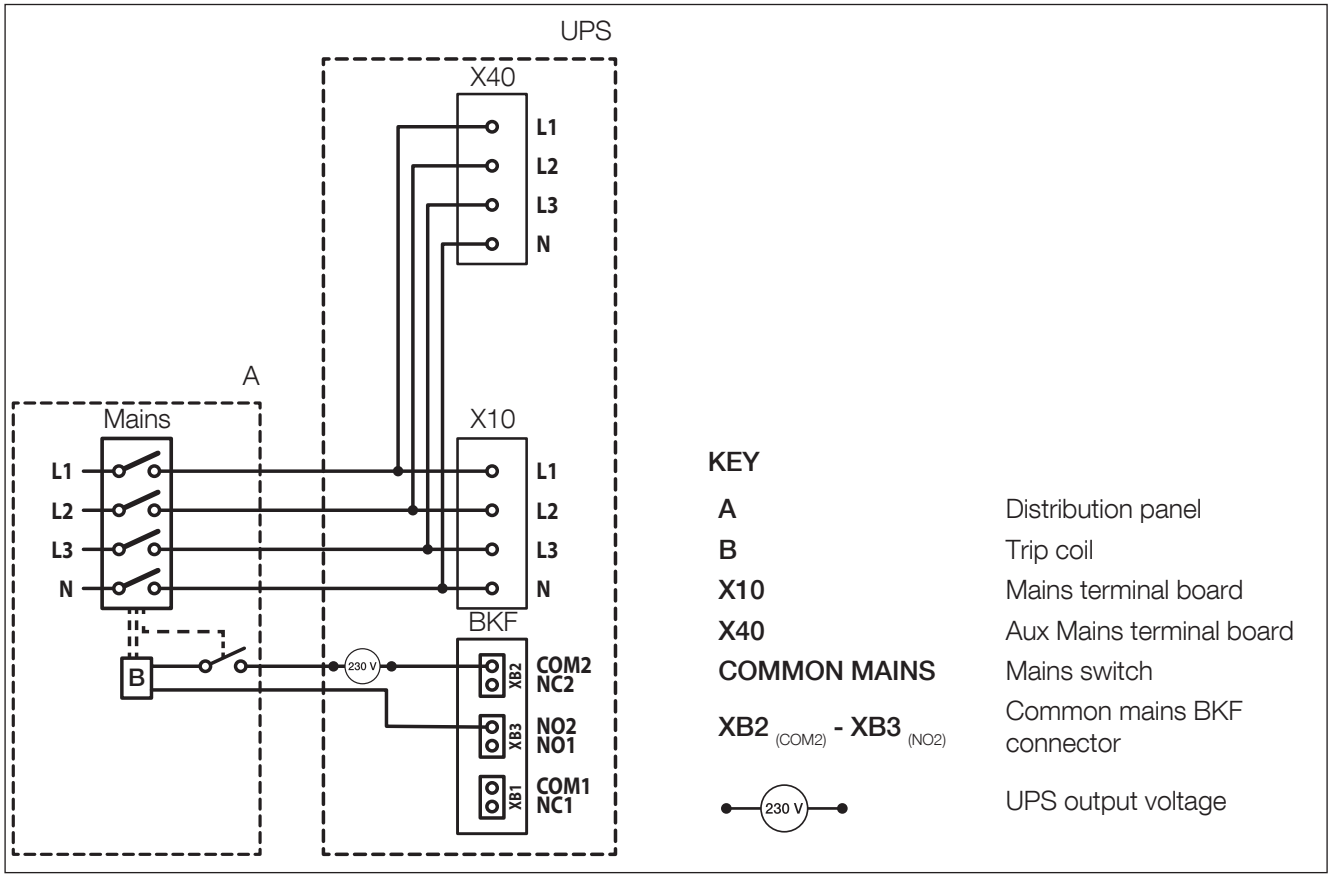

4.4 CABLE POSITIONING

⚠	WARNING! The cables must be installed on trays according to the following diagrams. The trays must be positioned near the UPS.
⚠	WARNING! All metal and suspended ducts or those in raised flooring MUST be connected to earth and to the various cabinets
⚠	WARNING! Power cables and control cables MUST NEVER be installed in the same duct.
⚠	WARNING! Risk of electromagnetic interference between battery cables and output cables.

Correct installation

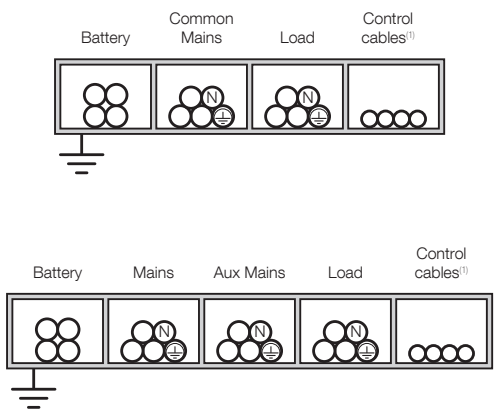

Acceptable installation

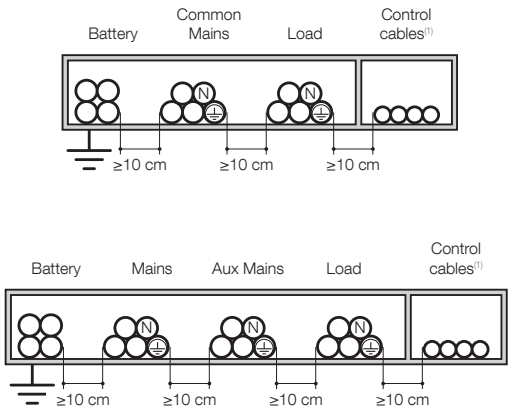

1. *Control cables: connections between the cabinets and each unit, alarm signals, remote mimic panel, connection to the BMS (Building Management System), emergency stop, connection to generator.*

5. OVERVIEW

5.1 RECOMMENDED CONFIGURATIONS

5.1.1 60-120 KVA

Single unit configuration

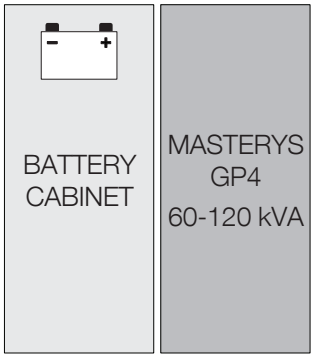

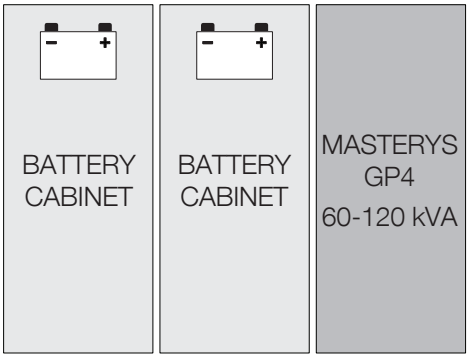

Parallel configuration with shared battery

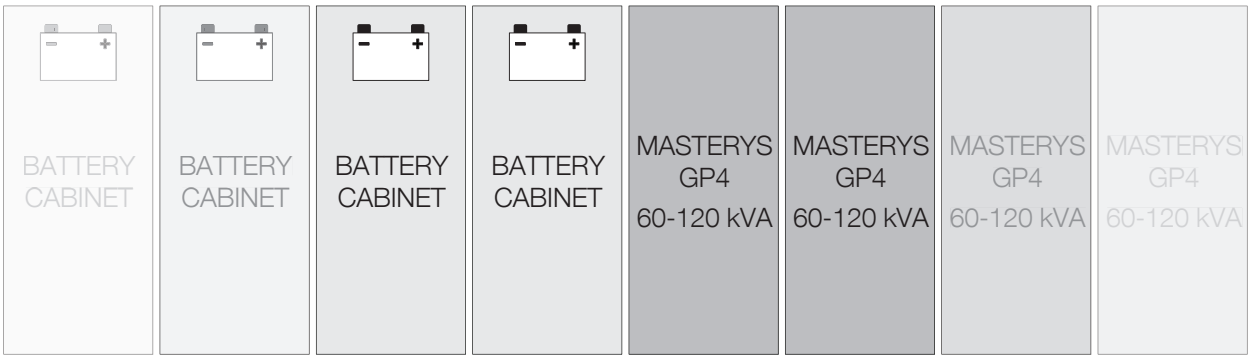

Parallel configuration with distributed battery

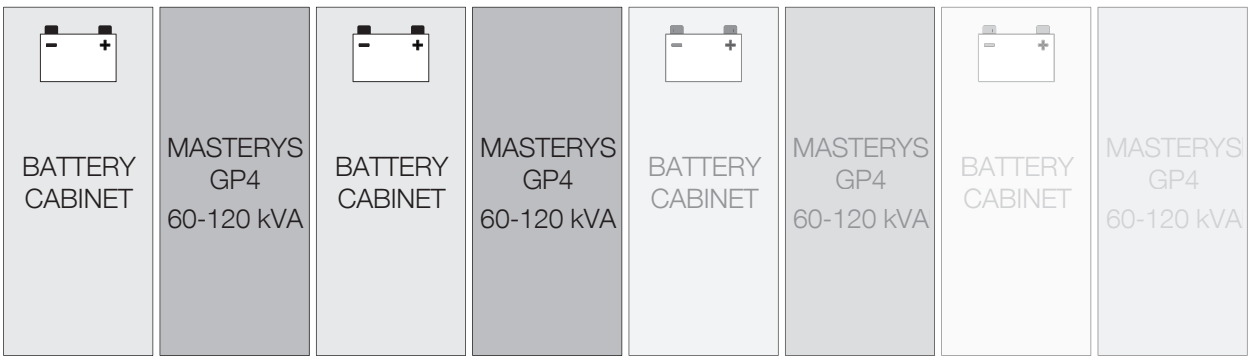

5.1.2 160 KVA

Single unit configuration

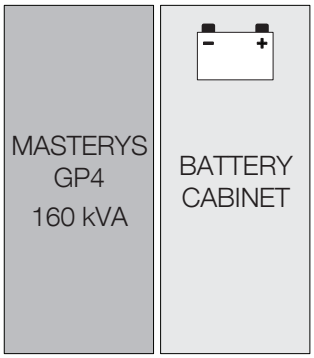

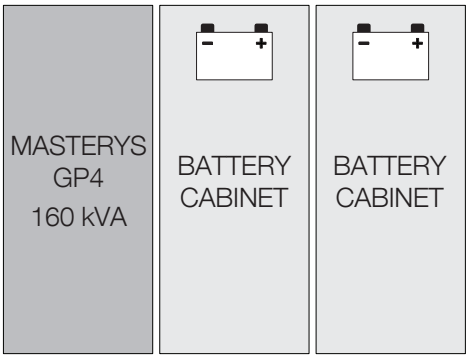

Parallel configuration with shared battery

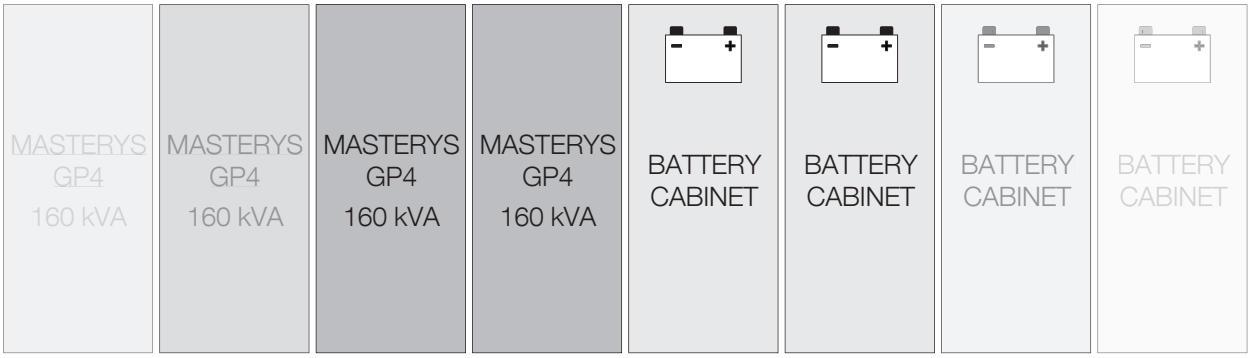

Parallel configuration with distributed battery

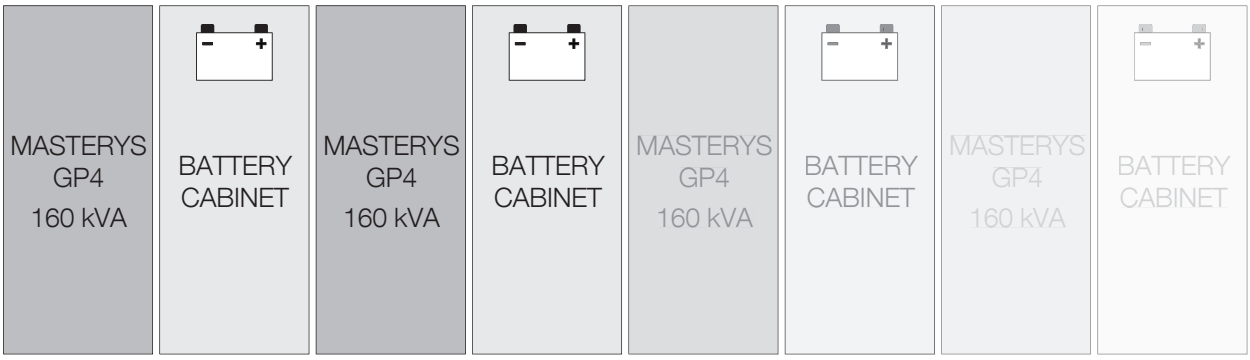

5.2 FRONT VIEW

KEY

1. Control panel
2. UPS door
3. Luminous status bar

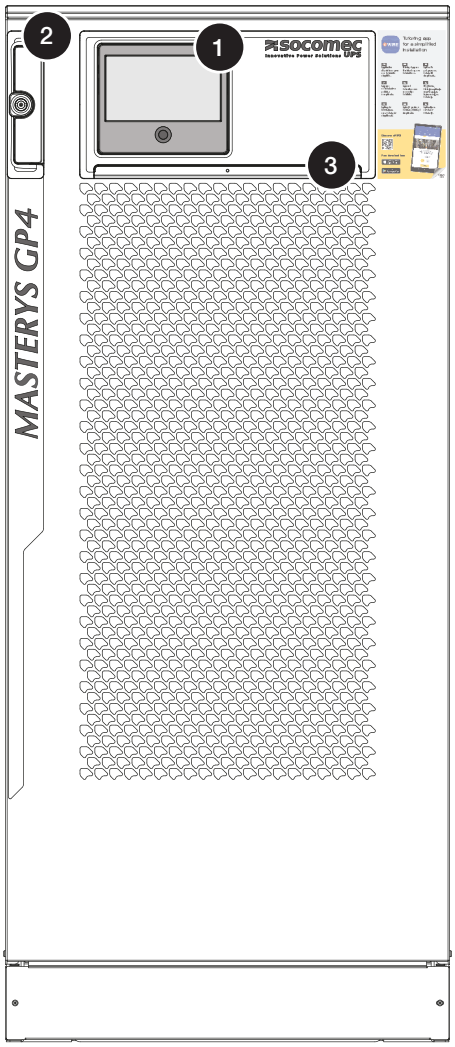

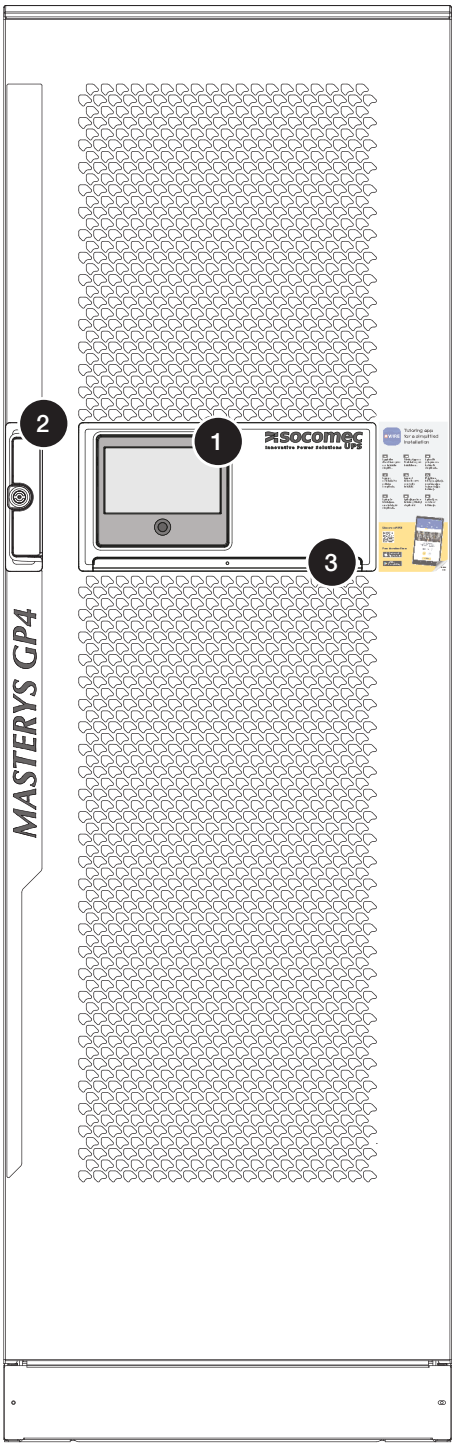

5.3 UPS SWITCHES

KEY

- Q1 Input switch (MAINS)
- Q4 Auxiliary mains Input switch (AUX MAINS)
- Q5 Maintenance bypass switch
- Q3 Output switch
- A UPS connections

60-120kVA

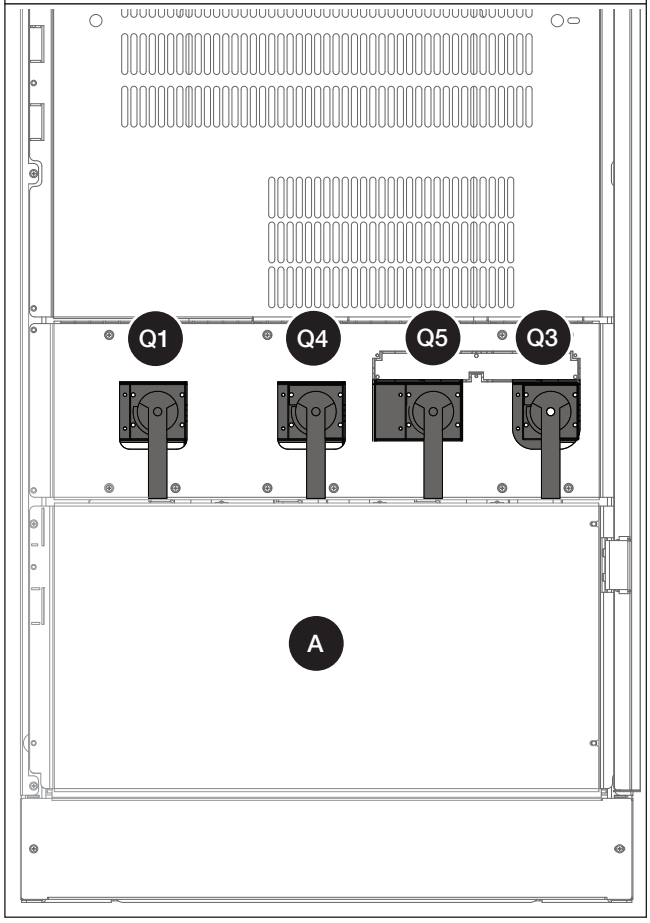

160kVA

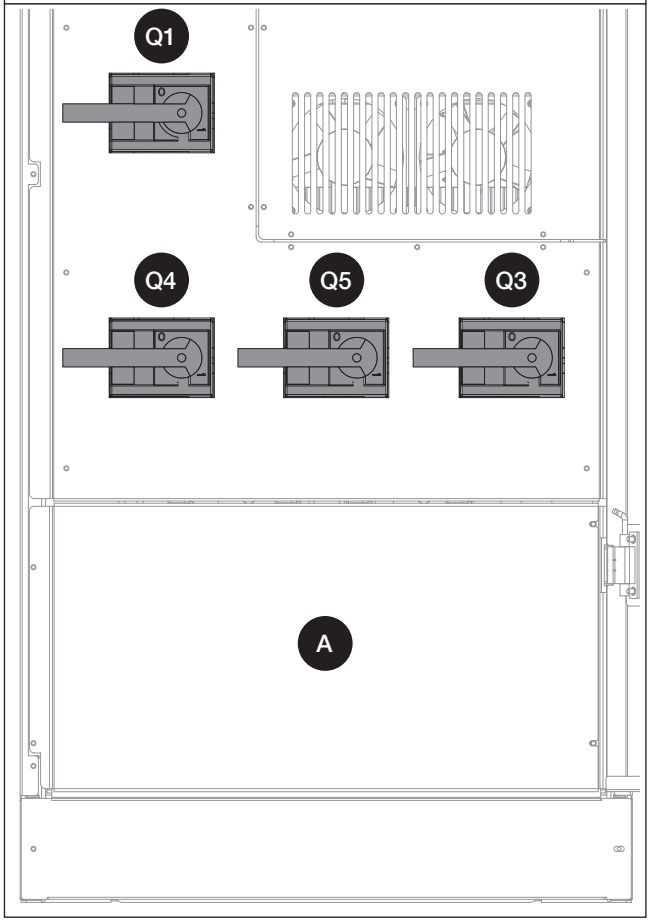

5.4 WIRING DIAGRAM

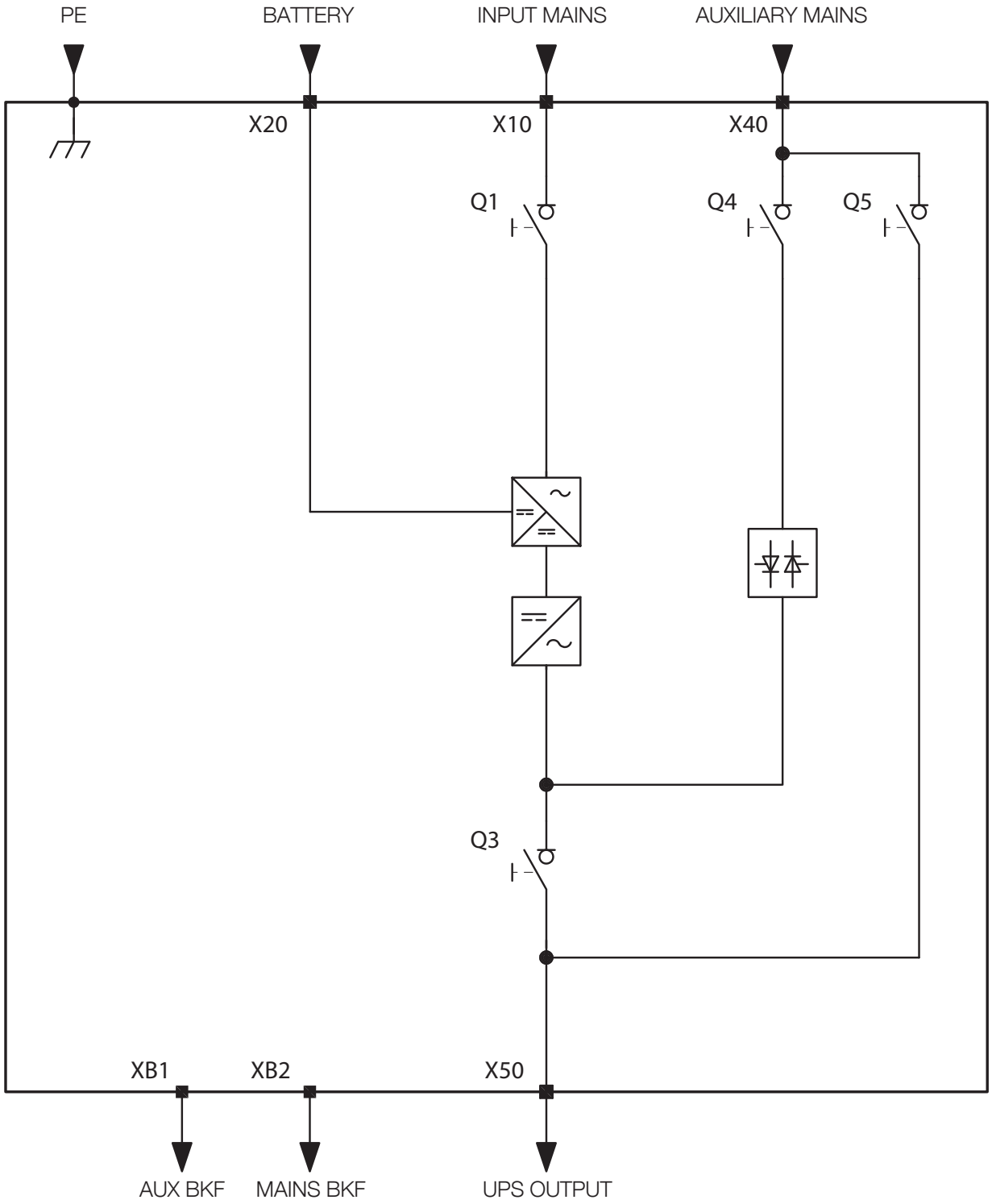

5.5 INTERNAL FRONT VIEW DETAILS

KEY

A	Option slots.	E	USB connector for service only.
B	Fuses.	F	Backfeed card.
C	230 V AC socket for service only.	G	External Maintenance Bypass for UPS single configuration only[1].
D	Ethernet network for service only.		

1. Connect a normally-closed early make contact from the external maintenance bypass switch.

60-120kVA

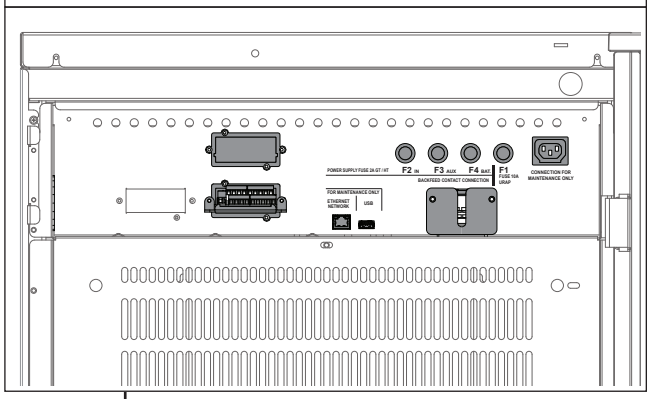

160kVA

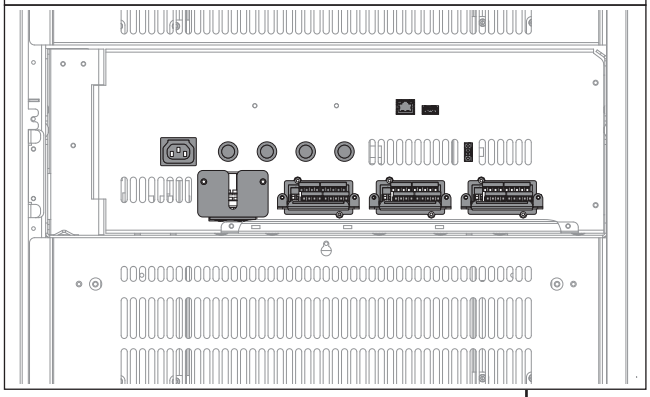

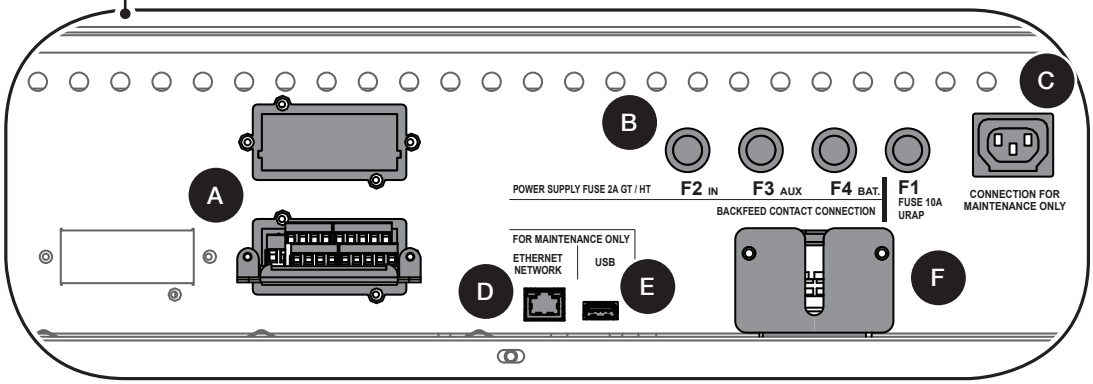

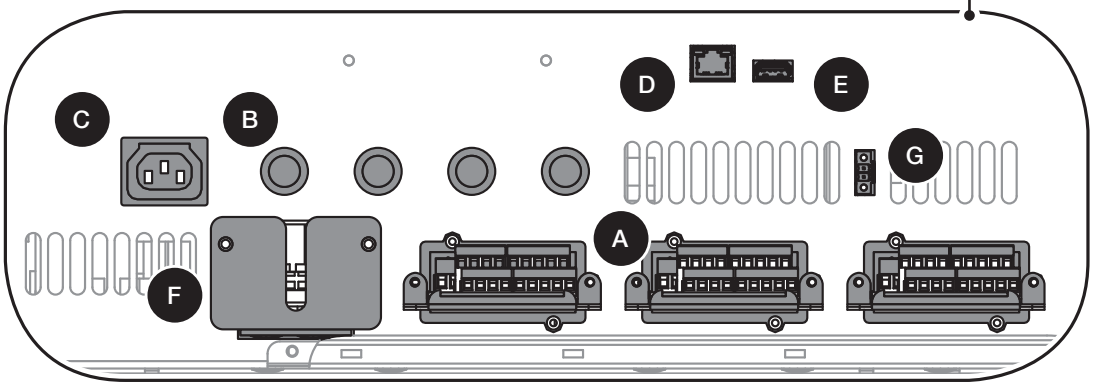

6. CONNECTIONS

⚠	NOTE! Before carrying out any operations on the unit read the 'Safety standards' chapter carefully.
⚠	WARNING! Battery power terminals are supplied by external battery cabinet. Before working on this circuit ensure that: - all the external battery cabinet switches are in OFF position; - the UPS is in maintenance bypass mode (refer to 'Operating modes' chapter) Check for presence of voltage before operating.
⚠	Use cables with tin-plated eyelets for the connections.

	Connections						
	⏚	-	+	N	L1	L2	L3
MASTERYS GP4 60-80 kVA							
▶ PE	M10						
▶ Battery		M10	M10	M10			
▶ Input mains				M8	M8	M8	M8
▶ Aux mains				M8	M8	M8	M8
▶ Output				M8	M8	M8	M8
MASTERYS GP4 100-120 kVA							
▶ PE	M10						
▶ Battery		M10	M10	M10			
▶ Input mains				M10	M10	M10	M10
▶ Aux mains				M10	M10	M10	M10
▶ Output				M10	M10	M10	M10
MASTERYS GP4 160 kVA							
▶ PE	M10						
▶ Battery		M10	M10	M10			
▶ Input mains				M10	M10	M10	M10
▶ Aux mains				M10	M10	M10	M10
▶ Output				M10	M10	M10	M10

M8 terminals *Tightening torque 20 Nm*
M10 terminals *Tightening torque 40 Nm*

- 60-120 kVA

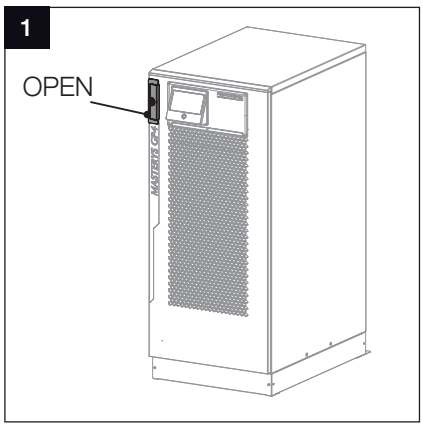

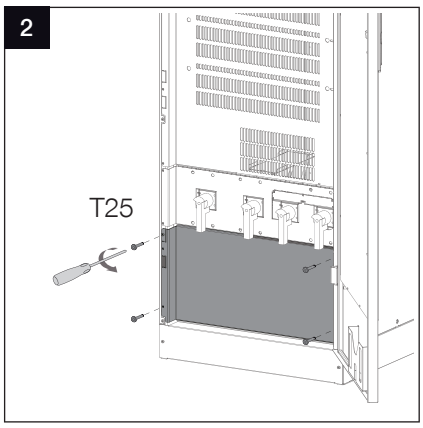

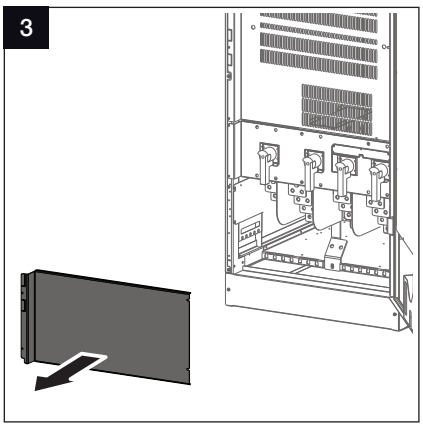

- 160 kVA

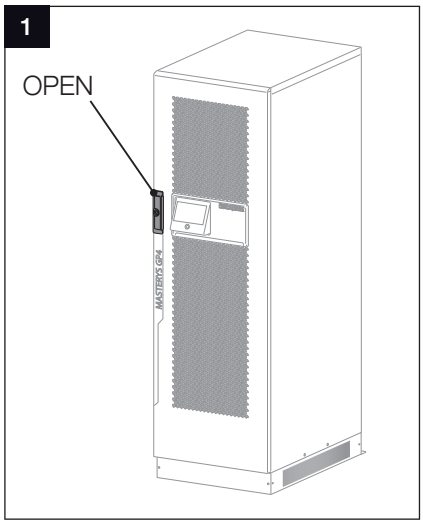

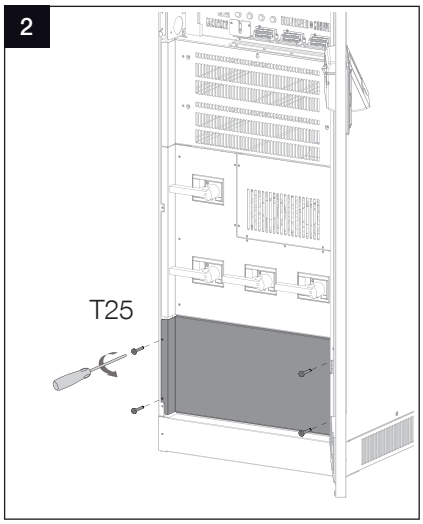

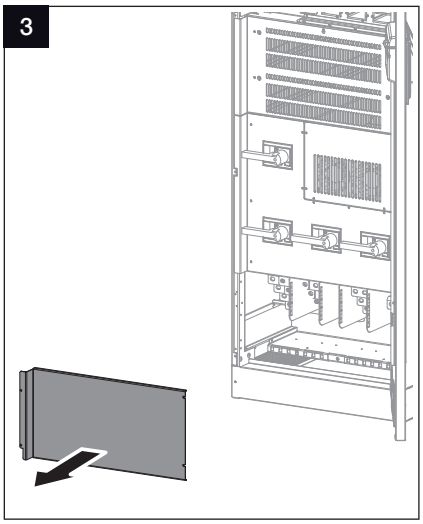

6.1 UPS CONNECTION

⚠	WARNING! Cabling errors with inversion between phase and neutral conductors may cause permanent damage to the equipment.

6.1.1 60-80 KVA CONNECTIONS

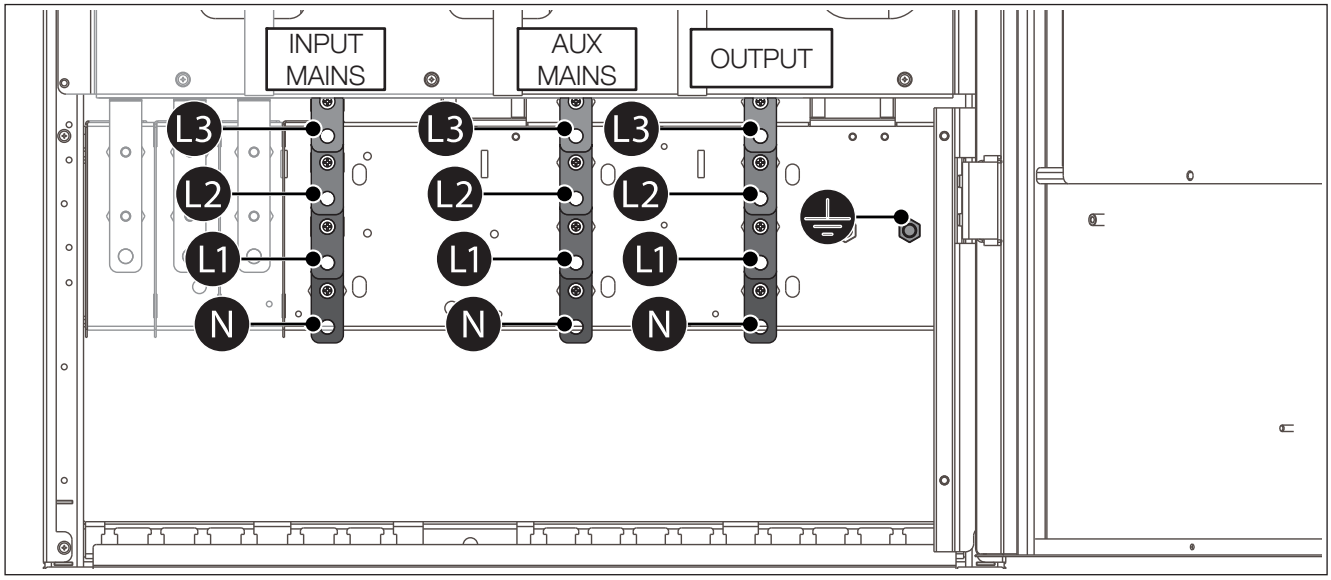

6.1.2 100-120 KVA CONNECTIONS

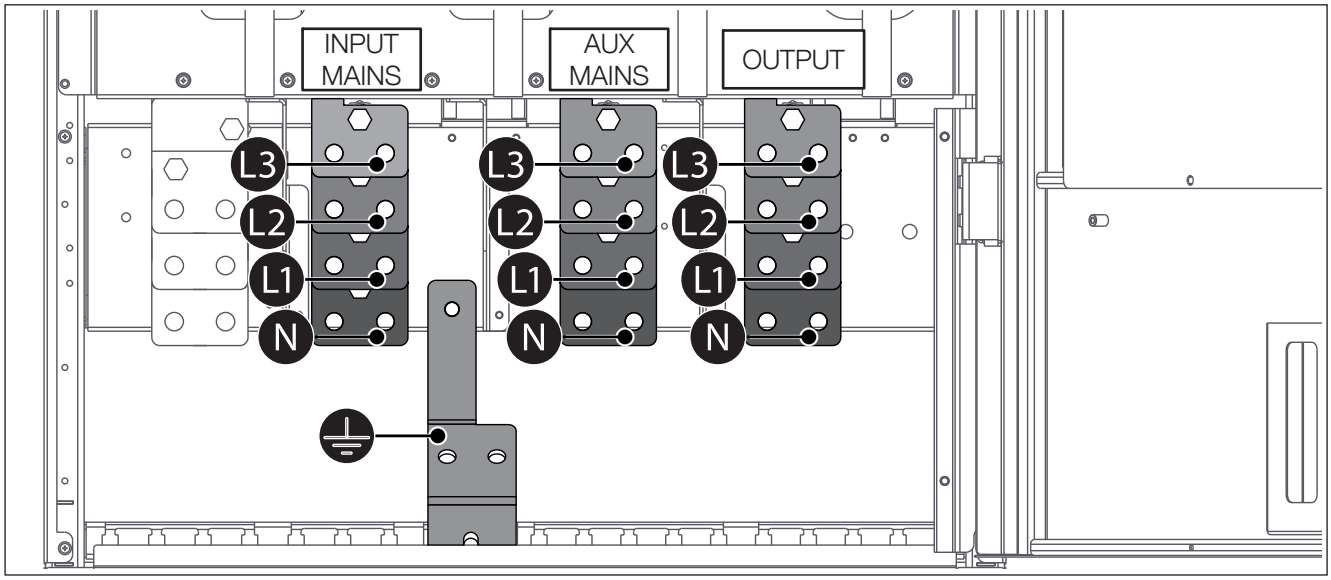

6.1.3 160 KVA CONNECTIONS

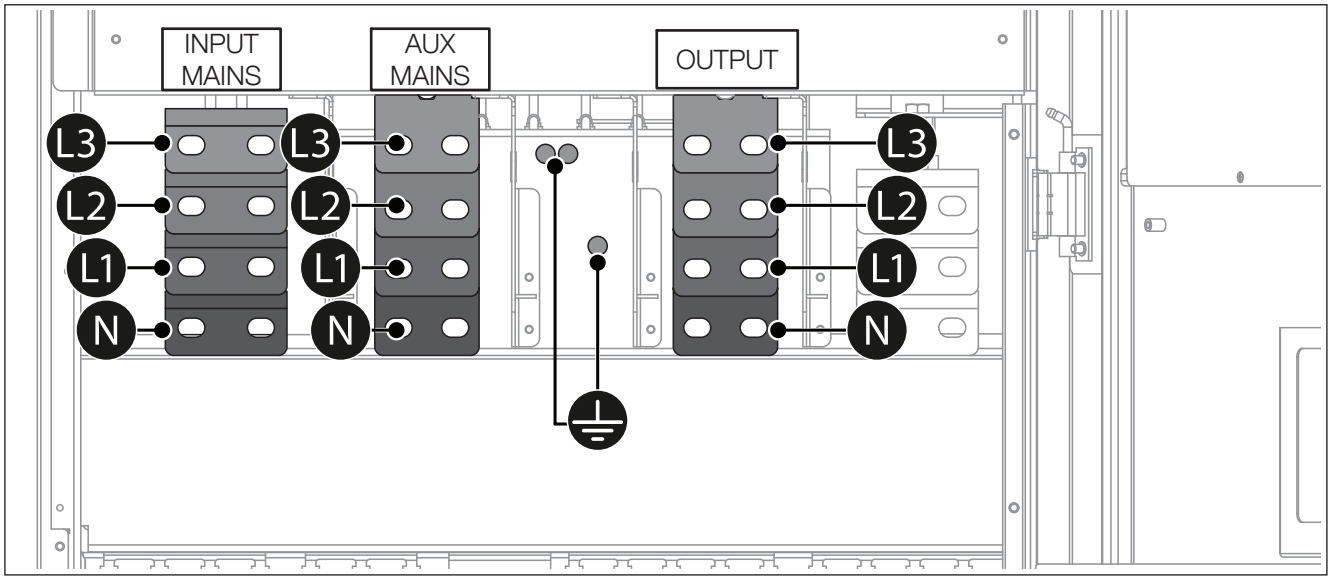

6.2 EXTERNAL BATTERY CONNECTION

⚠	NOTE! For further information refer to the battery cabinet manual.

- Remove the plastic terminal block protection.
- Connect the protective earth (PE) cable.
- Connect the cables between the UPS terminals and the battery cabinet terminals.

⚠	WARNING! Strictly observe: - the polarity of each individual string (refer to the figure below); - the cable cross section (refer to 'Electrical requirements' chapter).
⚠	WARNING! Cabling errors with inversion of battery polarity may cause permanent damage to the equipment.
⚠	Reassemble the plastic terminal block protection.

MASTERYS GP4 60-80 kVA

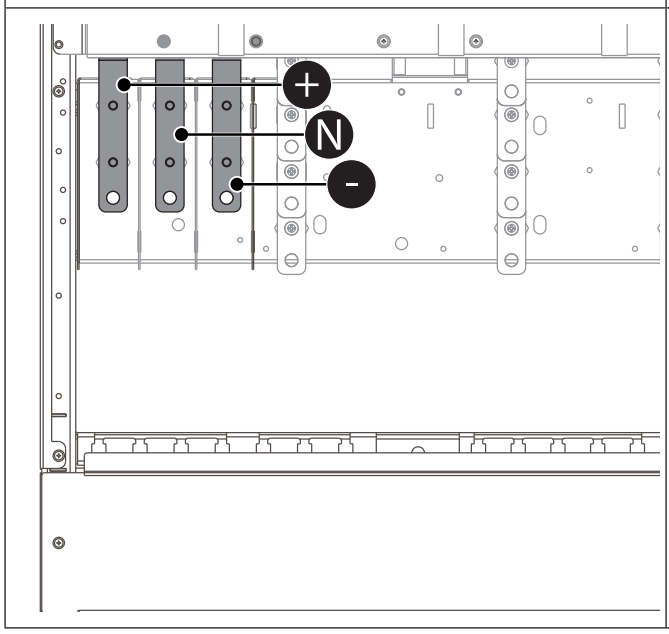

MASTERYS GP4 100-120 kVA

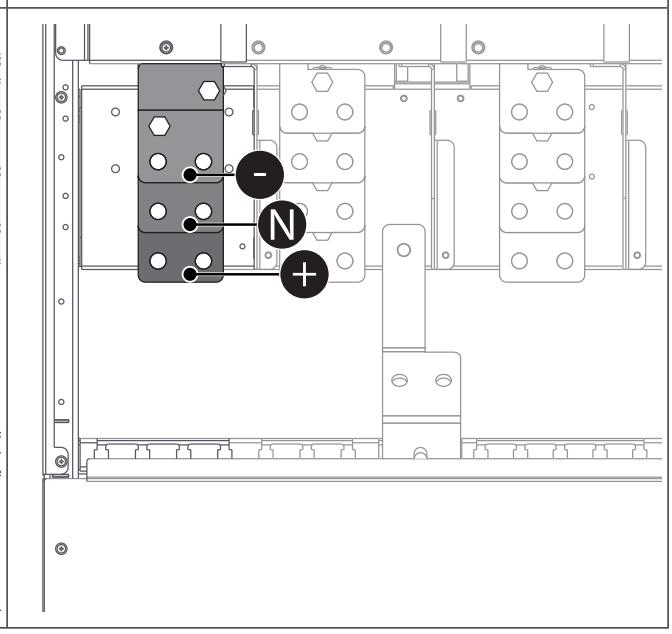

MASTERYS GP4 160 kVA

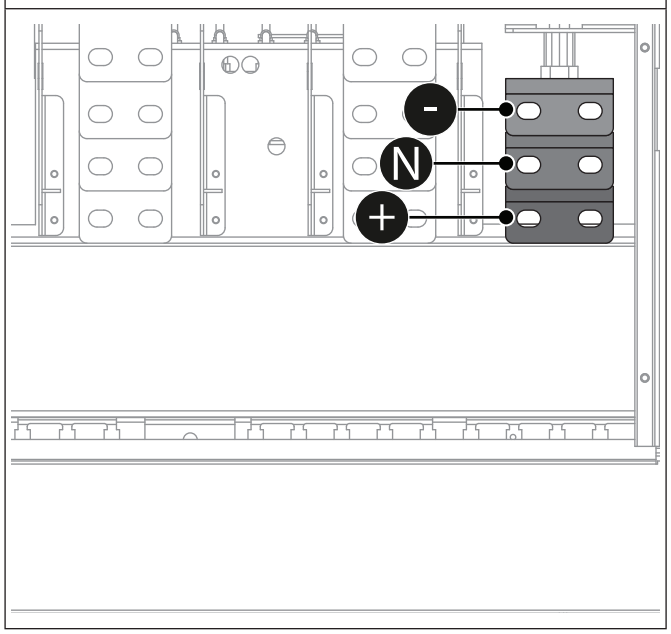

⚠	WARNING: pay attention to the individual cable range for battery connections.

Connection example - single unit

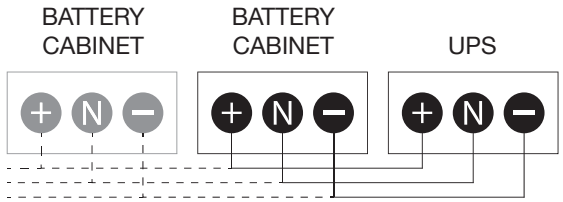

Connection example - parallel configuration with shared battery

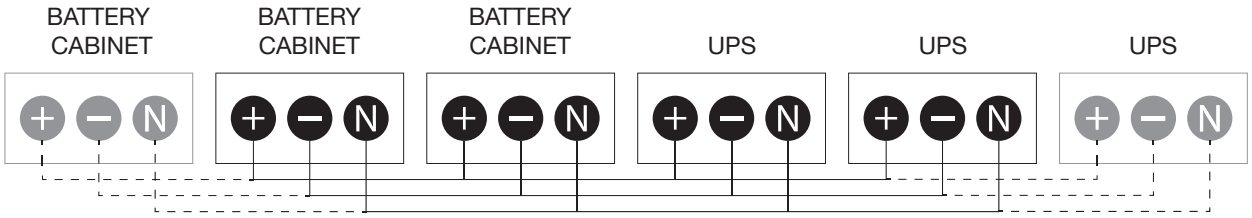

Connection example - parallel configuration with distributed battery

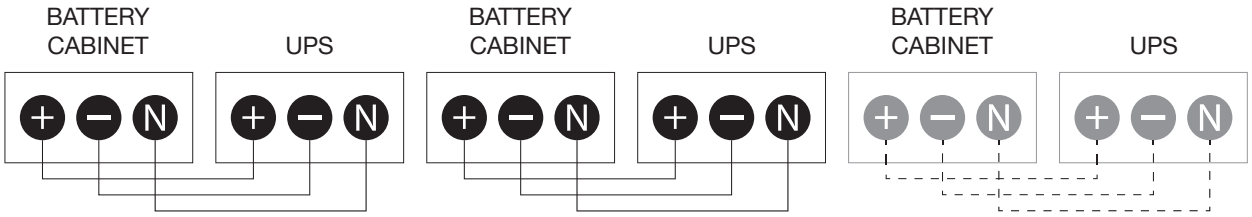

⚠	Note! When battery cabinets not supplied by Socomec are used, the installer is responsible for: - checking electrical compatibility; - checking the presence of appropriate protective devices (fuses and circuit breakers that ensure the cables are protected from the UPS to the battery cabinet). Once the UPS is switched on – before closing the battery switches – check the battery parameters on the control panel menu. For further information, refer to 'Display operation' chapter.
⚠	Note! Not all battery/capacity combinations are available.

6.3 COMPLETION OF THE INSTALLATION

- 60-120 kVA

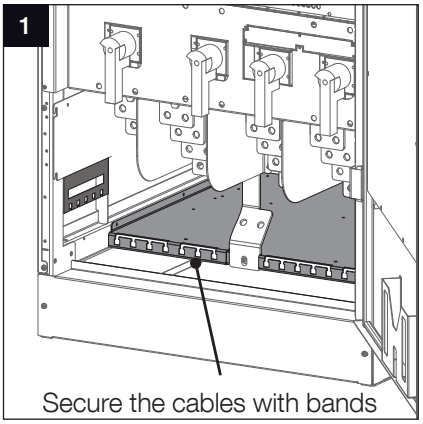

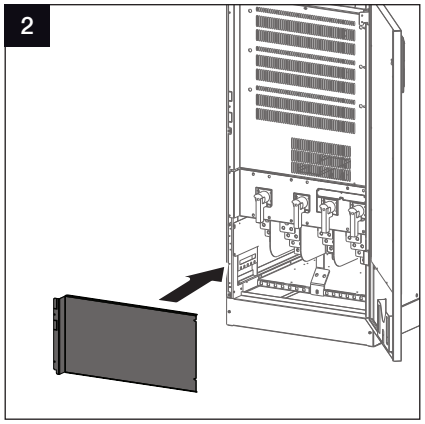

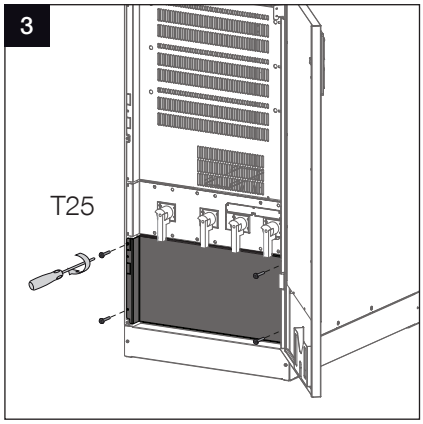

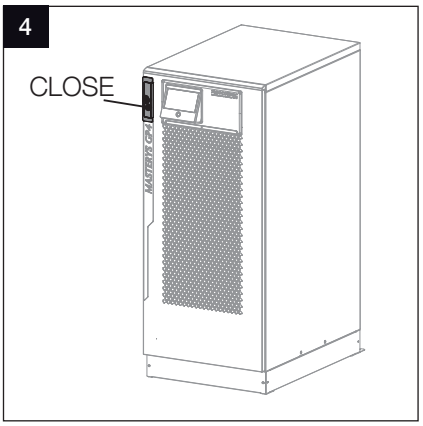

- 160 kVA

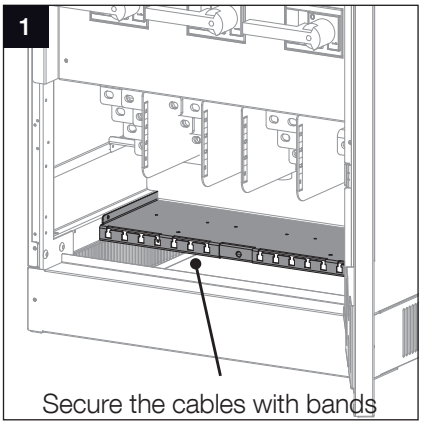

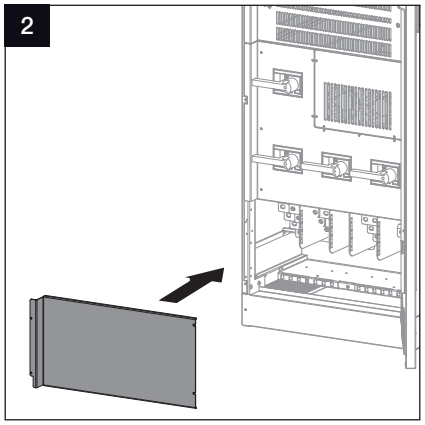

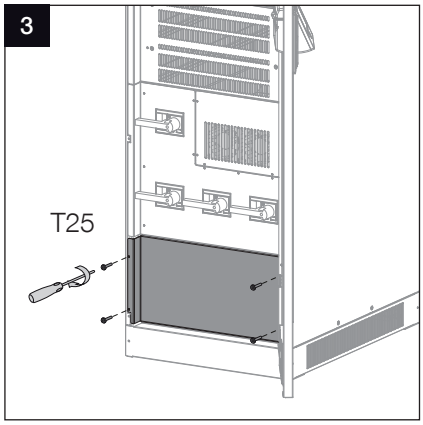

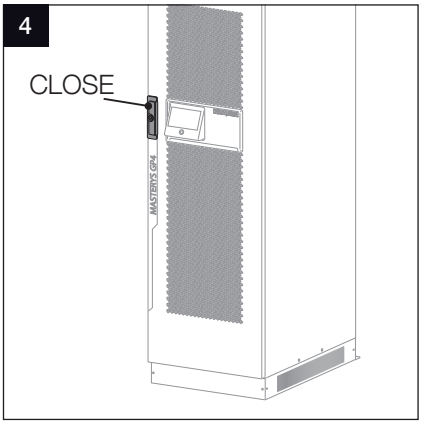

7. CONTROL PANEL

The control panel can be rotated to provide a front (factory setting, this configuration is mandatory with IP21 protection level) and angled touch screen mounting.

7.1 VERTICAL MOUNT

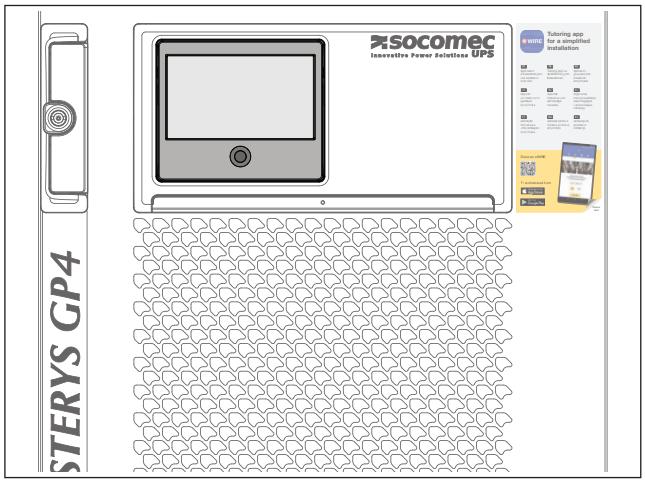

7.2 ANGLED MOUNT

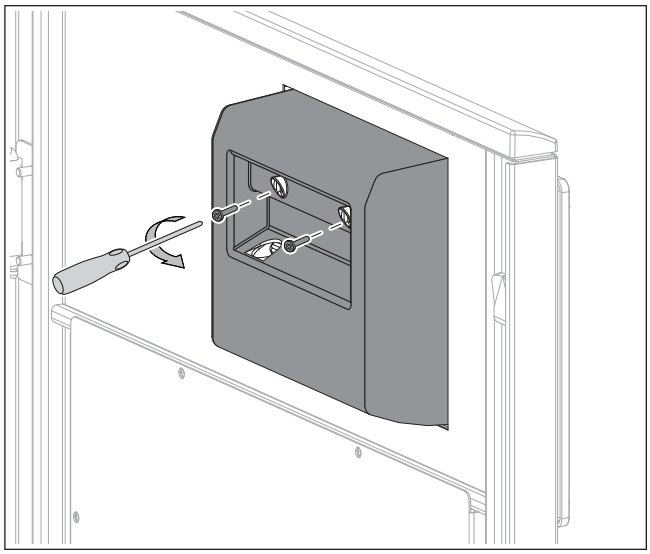

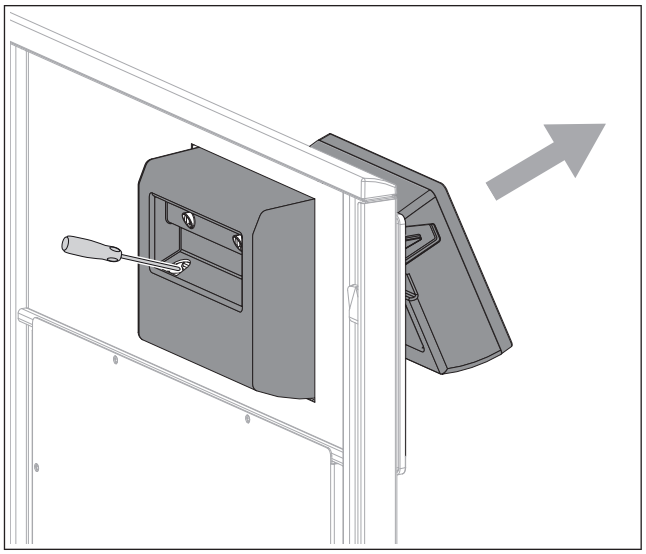

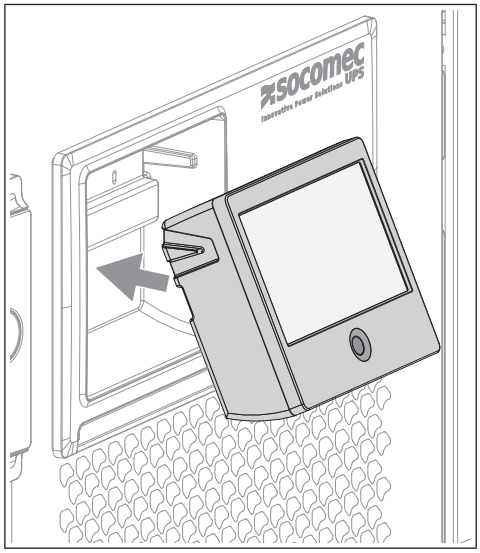

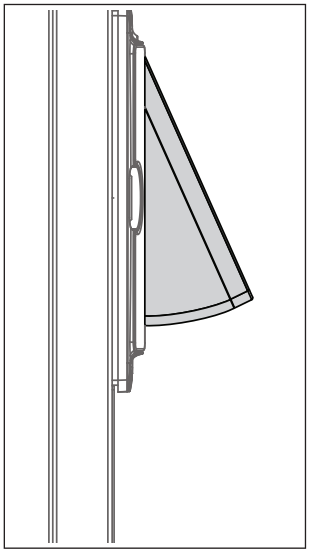

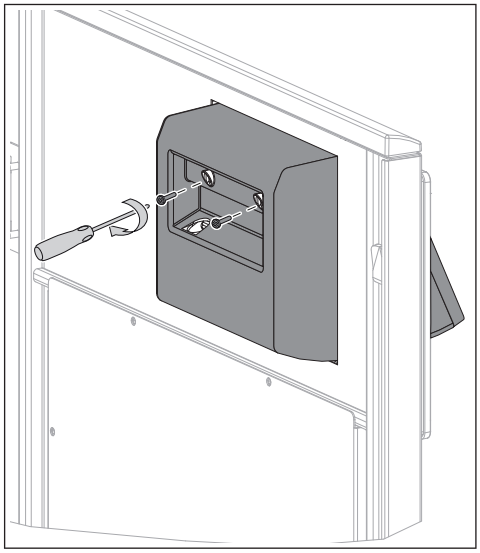

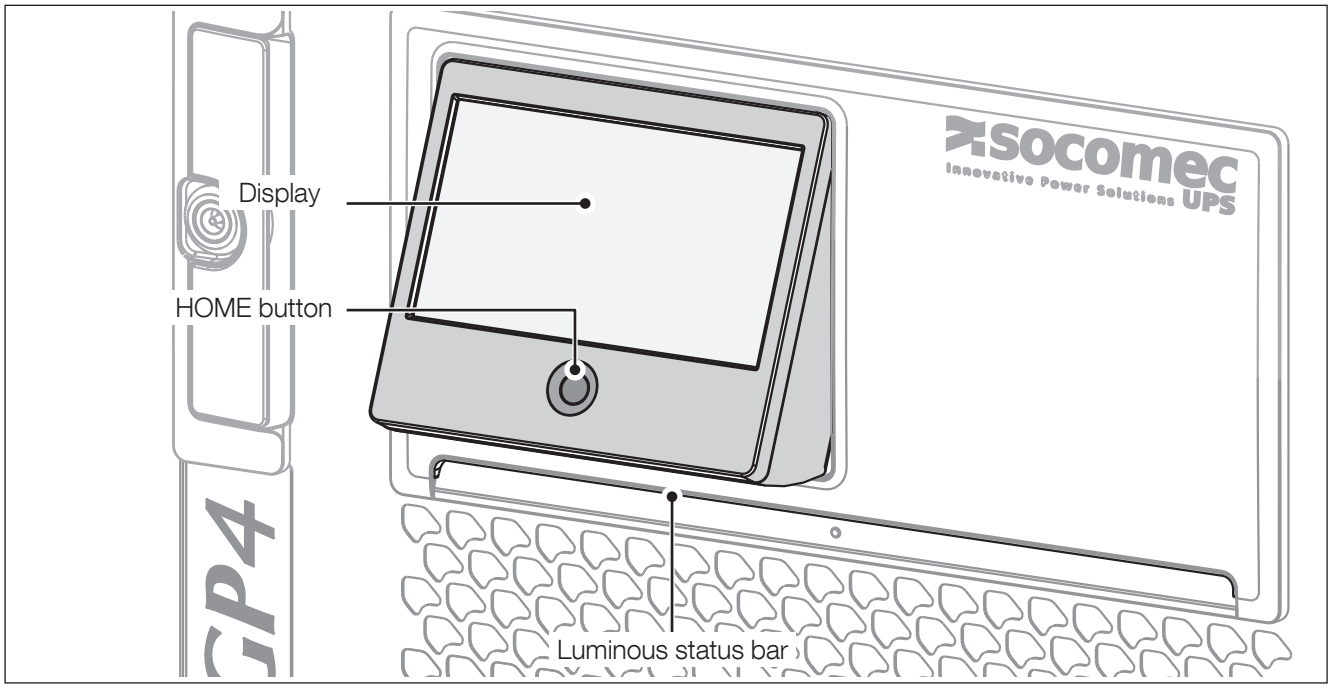

Control panel with LED status bar indicator	
Colour	Description
Flashing red-yellow-green-red	No communication. The data is no longer updated or not present. Load status cannot be given.
Flashing red	Load supplied, but the output will stop in few minutes.
Red	Load not supplied: Output switched OFF due to an alarm.
Flashing yellow-red	Load supplied, but no longer protected. A critical alarm occurs.
Flashing yellow	Maintenance requested / or service mode in progress.
Yellow	Load supplied with warning.
Flashing green-yellow-green	Load supplied and preventive alarm present.
Flashing green	Load going to be supplied, battery test in progress or UPS auto-test running.
Green	Load protected by inverter or UPS in eco mode.
Grey (OFF)	Load not supplied: output on standby / isolated / OFF.

Only two elements are necessary to interact with the unit:

- HOME button: is a mono-stable button used to interact manually with the display especially in emergency situations. Logic behind the interaction is:
  - Single pressing (below 3 sec): HOME page return of graphic display
  - 3 sec < time < 6 sec: change the language to the default (English)
  - 6 sec < time < 8/9 sec: go to the calibration screen automatically
  - Above 8/9 sec: implement the hw reset of the micro controller and restart of the graphic
- Display: is the main active matrix of the display sensitive to touch pressure. The display is designed for rugged industrial applications. The display is single-touch only (no double touch effects). Depending on pressure, the navigation tree and various functions will be executed.

Two special functions are present on the control panel:

- Standby screen: for safety reasons, after a programmable amount of time, the display goes on standby. Display goes to the main screen and touch screen sensitivity is disabled. A label on the bottom of the main screen displays this status. To exit this status press the screen for the HOME button.
- OFF status: for power consumption and life enhancement, after a programmable amount of time display goes in “off”. Display goes black and no interaction is possible. Touching the HOME button or screen resumes normal operations.

⚠	**Handle the control panel with care. It is made of metal, glass and plastic and contains delicate electronic components. The control panel may be damaged if dropped, pierced or broken or comes into contact with liquids.** **Do not use the control panel with a cracked screen, as it may cause injury.**

8. DISPLAY OPERATION

8.1 DISPLAY DESCRIPTION

- Stand alone UPS or unit view

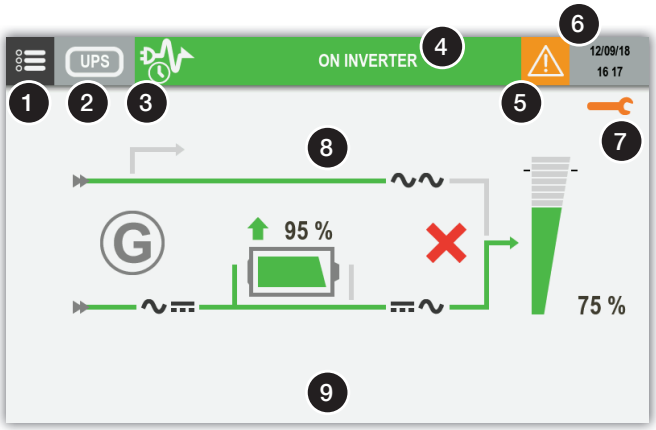

- UPS parallel system: System view

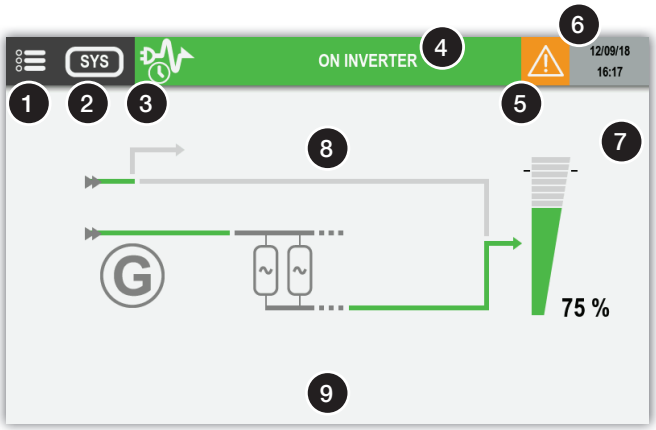

- UPS parallel system: Units overview

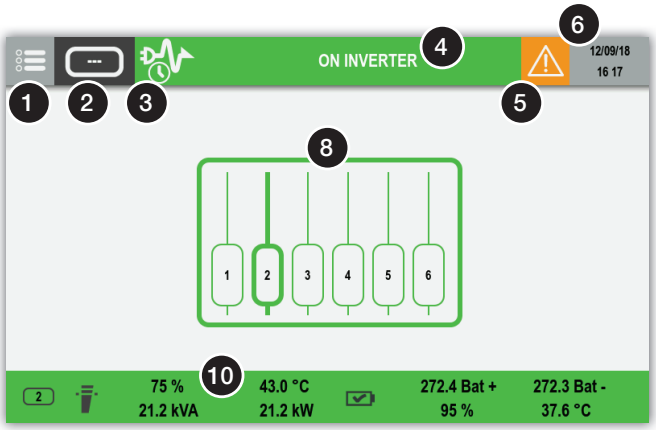

1. Menu access
2. Device reference
3. Functioning mode (see 'Functioning mode' chapter)
4. Status displaying / Status page access
5. Alarm present – access to alarm page
   "Alarms" icon appears in case of preventive/critical alarm. A dedicated pop-up appears and can be cleared.
6. Clock
7. Maintenance alert
8. Synoptic area
9. Help message area
   "Press Key to wake up" appears when the display goes on standby. Touch the display to wake it up.
10. Measures report

8.2 MENU ARCHITECTURE

	MENU ITEMS		
	Stand alone UPS [UPS]	Unit [1] to [6]	UPS System [SYS]
MONITORING			
▶ ALARMS	•	•	•
▶ STATUS	•	•	•
▶ SYNOPTIC	•		
▶ UNIT		•	•
▶ SYSTEM		•	•
▶ UNITS OVERVIEW		•	•
EVENTS LOG	•	•	•
MEASUREMENTS			
▶ OUTPUT MEASUREMENTS	•	•	•
▶ BATTERY MEASUREMENTS	^	^	^
▶ INPUT MEASUREMENTS	•	•	•
▶ INVERTER MEASUREMENTS	•	•	
▶ BYPASS MEASUREMENTS	^	^	^
CONTROLS			
▶ UPS PROCEDURE			
▶ START	•[1]		•[1]
▶ STOP	•[1]	•[1]	
▶ ON MAINTENANCE BYPASS	•[1]		•[1]
▶ MODE			
▶ ECO MODE CONTROLS			
▶ Eco Mode ON	^		^
▶ Eco Mode OFF	^		^
▶ ECO MODE SCHEDULE	^		^
▶ ENERGY SAVER CONTROLS			
▶ Energy Saver ON			^
▶ Energy Saver OFF			^
▶ BATTERY			
▶ BATTERY CONTROL			
▶ BATTERY TEST	^	^	^
▶ BATTERY SCHEDULE	^	^	^
▶ MAINTENANCE			
▶ Alarms reset	•	•	•
▶ Postpone maintenance alarm	•	•	•
▶ LED test	•	•	•
▶ User report	•	•	•

	MENU ITEMS		
	Stand alone UPS [UPS]	Unit [1] to [6]	UPS System [SYS]
CONFIGURATIONS	•		•
▶ CLOCK	•		•
▶ COM-SLOTS			
▶ COM-Slot 1	^	^	
▶ COM-Slot 2	^	^	
▶ COM-Slot 3[2]	^	^	
▶ TEMPERATURE PROBE	^	^	
▶ REFERENCE			
▶ SOCOMEC REFERENCE	•	•	•
▶ SERIAL NUMBER	•	•	•
▶ User Reference	•	•	
▶ Location	•	•	
▶ REMOTE			
▶ Remote ON	•		•
▶ Remote OFF	•		•
USER PARAMETERS			
▶ LANGUAGE	•		•
▶ PASSWORD	•		•
▶ BUZZER	•		•
▶ ADC+SL CONFIG	•	•	
▶ DISPLAY	•		•
▶ PREFERENCES	•		•
▶ TOUCHSCREEN	•	•	•

	MENU ITEMS		
	Stand alone UPS [UPS]	Unit [1] to [6]	UPS System [SYS]
SERVICE			
▶ SERVICE REPORT	•	•	
▶ FIRMWARE VERSIONS	•	•	
▶ UPS SETTINGS			
▶ OUTPUT MENU			
▶ Output voltage	•		•
▶ Output frequency	•		•
▶ Converter mode	•		•
▶ Automatic restart	•		•
▶ BATTERY MENU			
▶ BATTERY INSTALLATION			
▶ Battery available	^	^	^
▶ Battery type	^	^	^
▶ Battery connection	^	^	^
▶ Recharge type	^	^	^
▶ BATTERY DATA			
▶ Capacity	^	^	^
▶ N° of cells	^	^	^
▶ N° of blocks	^	^	^
▶ Premin. Voltage	^	^	^
▶ Min. Voltage	^	^	^
▶ Floating	^	^	^
▶ Boost Voltage	^	^	^
▶ BATTERY THRESHOLDS			
▶ Rech. Curr. Limit	^	^	^
▶ Float-Boost Threshold	^	^	^
▶ Boost-Float Threshold	^	^	^
▶ TEMP.COMPENSATION			
▶ Temper.Compensation	^	^	^
▶ MAINS CONFIGURATION			
▶ Mains configuration	•		•
▶ PARALLEL SYSTEM			
▶ Units in parallel			•
▶ Redundancy level			•
▶ NETWORK PARAMETERS (Only for service)			
▶ DHCP	•	•	
▶ IP	•	•	
▶ MASK	•	•	
▶ GATEWAY	•	•	
▶ MAC	•	•	

(^). Depending on setting

1. Displayed depending on state.

2. Only available for 160 kVA.

8.3 FUNCTIONING MODE


Service


Isolated


Eco mode scheduling active

Fast Eco Mode


Eco Mode active


Standby active


Energy saver active


Autotest

8.4 STATUS

8.4.1 STATUS PAGE

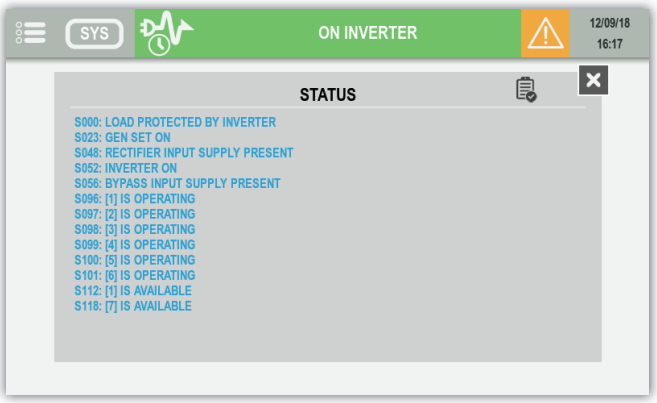

Filtering


List all active status


List all status


List all status not active

8.5 ALARMS MANAGEMENT

8.5.1 ALARM REPORT

The alarm icon is present if at least one alarm is present.

Tap on the icon to open the alarm list.

8.5.2 ALARM POPUP

In case of critical alarm a popup message appears and the buzzer is running according its settings.

The highest priority alarm is displayed.

Tap on valid button to stop the buzzer and to close the popup message. The alarm page is automatically display after this action.

8.5.3 ALARM PAGE

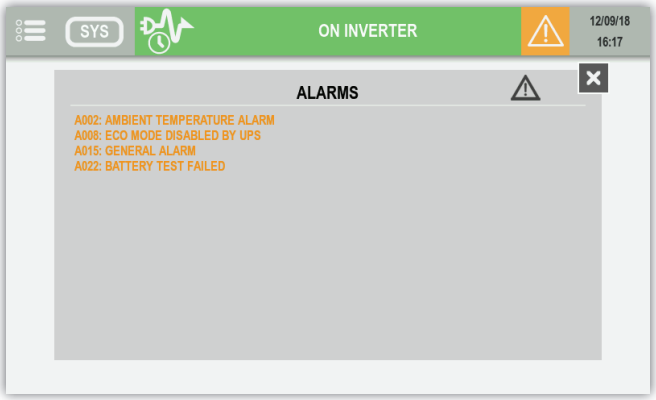

Filtering


List all active alarms


List all active preventive alarms


List all active critical alarms

POPUP ALARM FOR PREVENTIVE ALARM

In USER PARAMETERS menu, USER PREFERENCES item gives the possibility to enable popup alarm also with preventive alarms.

8.6 SYNOPTIC ANIMATION

- Stand alone UPS or unit view

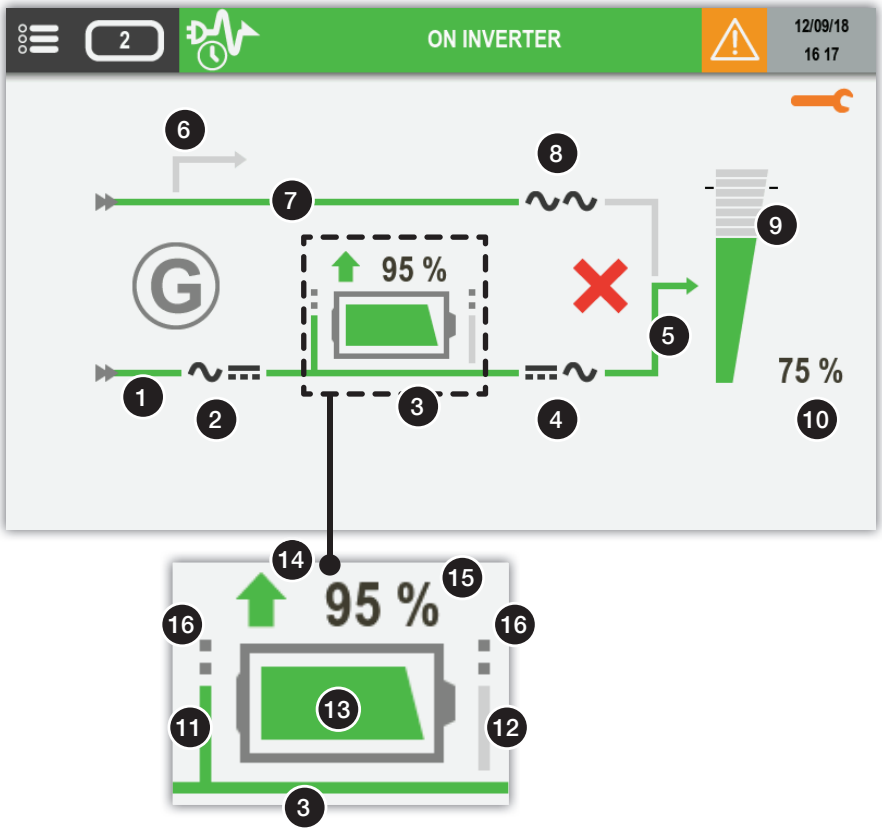

- UPS parallel system: System view

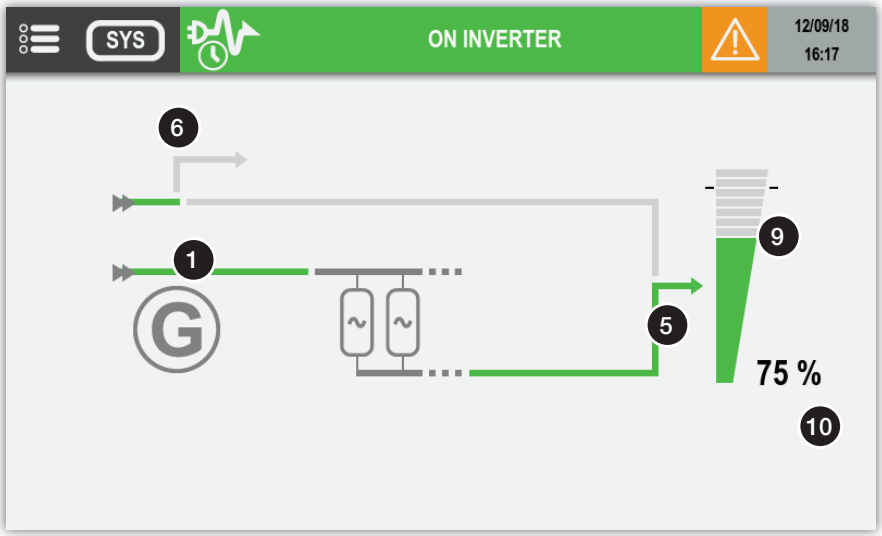

Item	Description	Rules of animation				Touch actions
		Grey	Green	Yellow	Red	
1	Rectifier input supply	Not present	Present	Out of tolerance	-	-
2	Rectifier status	Normal status	-	Preventive alarm	Critical alarm	Access to input measurements page
3	DC voltage bus	DC voltage absent	DC voltage presence	-	-	-
4	Inverter status	Normal status	-	Preventive alarm	Critical alarm	Access to inverter measurements page
5	Inverter output	Inverter OFF	Inverter ON	Inverter on battery	-	-
6	Maintenance bypass *	MBP present	-	Load on maintenance bypass	-	-
7	Bypass input *	Not present	Present	Out of tolerance	-	-
8	Bypass status *	Normal status	-	Preventive alarm	Critical alarm	Access to bypass page
9	Load rate symbol	No load	Fill-up to 95%	Fill-up to 110%	Fill-up over 110%	Access to output measurements pages
10	Load rate value	Instantaneous value. displayed if value > 0				-
11	DC battery input **	DC voltage absent	DC voltage presence	BCR function running	-	-
12	DC battery output **	DC voltage absent	DC voltage presence	Inverter on battery		-
13	Battery indicator **	-	Fill-up to 100%	Fill-up to 45%	Fill-up to 15%	Access to bat. measurements page
14	Battery charging / discharging **	-	Battery charging	Battery discharging	-	-
15	Battery level or remaining backup time during battery discharge **	Instantaneous value. displayed if value > 0 The backup time is no more displayed if it is below two minutes.				-
16	Shared battery symbol not present if each unit has its own battery. **					-

** Element disappears if converter mode is active*

*** Not present if batteries are not present*

- UPS parallel system: Units overview

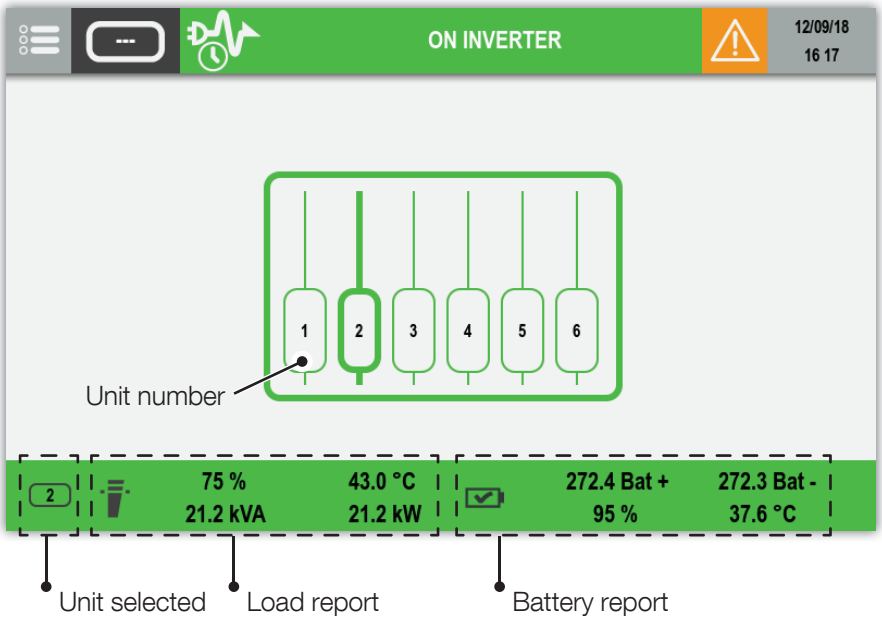

- **Battery animation**

Battery status	DESCRIPTION
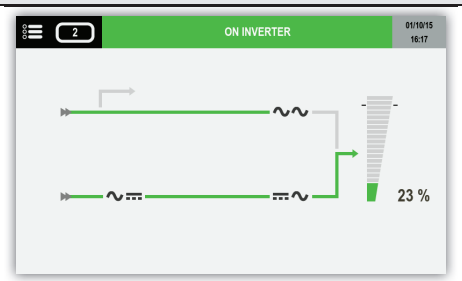	If battery is absent, the battery icon is not displayed
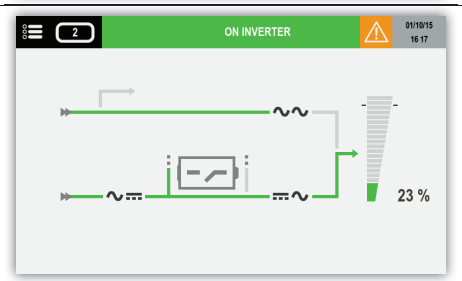	If battery is present but not connected, the icon is displayed
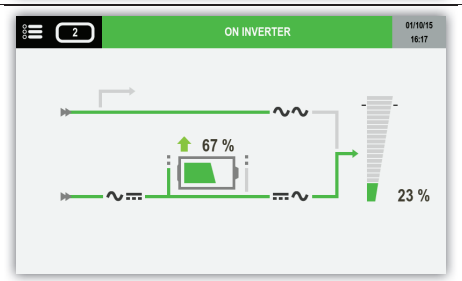	If the battery is present and charging, the arrow icon is displayed
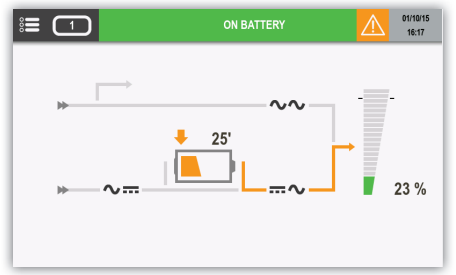	If the battery is present and discharging, the arrow icon is displayed
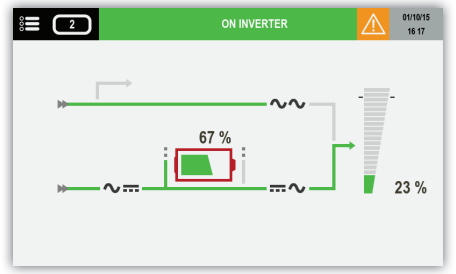	If a battery alarm has occurred, the red icon is displayed

8.6.1 ADDITIONAL ICONS

Bypass impossible

Bypass locked

“Genset Mode” when the gen set contact is active. Need ADC+SL correctly configured.

Maintenance alarm.
Preventive maintenance is requested.

8.7 EVENT LOG PAGE

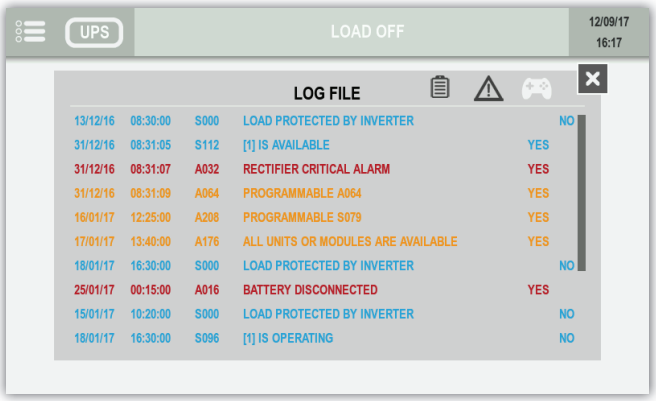

Show STATUS events

Show ALARMS events

Show CONTROLS

8.8 MENU FUNCTION DESCRIPTIONS

8.8.1 ENTERING PASSWORDS

Some operations and settings require a password in order to be performed.

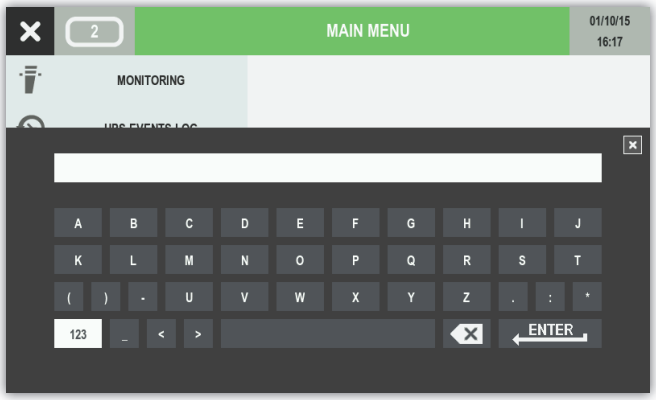

Press “123” to cycle to number view page.

Press ENTER to confirm.

Wildcard covering of the password is active by default.

The default password is **SOCO**.

Press **ENTER** to confirm the selection or **HOME BUTTON** to abort.

8.8.2 MONITORING MENU

Submenu Alarm opens the alarm pages.

Submenu Status opens the status pages.

8.8.3 EVENTS LOG MENU

This menu accesses the event log (Status and Alarms).

8.8.4 MEASUREMENTS MENU

This menu displays all UPS measurements relating to the rectifier input stage, output stage, batteries, bypass input stage and inverter.

The pins on the bottom of the screen indicate whether or not there are more pages. Sliding to the right or left changes measurements page.

8.8.5 CONTROLS MENU

This menu contains the commands that can be sent to the UPS. Some of them are password protected. If a command is not available, a COMMAND FAILURE message appears.

- **UPS PROCEDURE: START/ON MAINTENANCE BYPASS/STOP** see 'Operating procedures' chapter.
- **BATTERY: BATTERY CONTROL > BATTERY TEST:** this function checks whether or not test conditions are available and returns the results.
- **ECO MODE CONTROLS:** this function sets/resets the **ECO MODE**.
- **MAINTENANCE: Alarms reset:** this function clears the alarm history, **LED test:** this function activates LED flashing for a few seconds.

8.8.6 UPS CONFIGURATION MENU

- **CLOCK**: this function sets the date and time.
- **COM-SLOTS**: this function configures the RS485 modbus serial link.
- **REFERENCE:** this function gives the possibility to customised the unit reference and the location.
- **REMOTE**: this function enables controls from remote devices through MODBUS protocol (NET VISION for example).

8.8.7 USER PARAMETERS MENU

This menu contains the different functions for users such as language, password, buzzer, display, preferences, touchscreen calibration.

8.8.8 SERVICE MENU

This menu is reserved for support service personnel and holds UPS identification data and utilities for software upgrades.

- **UPS SETTINGS:** critical machine settings for output and backfeed. Some parameters cannot be modified when the UPS supplies the load by INVERTER or BYPASS.

⚠	**Wrong configuration in UPS SETTINGS could damage the load or the batteries.**

8.9 ADDITIONAL USER FUNCTIONS

8.9.1 PHASE COLOR MODIFICATION

- Enter **MAIN MENU > USER PARAMETERS > PREFERENCES**

For each phase is possible to select a specific colour in a set of colour range. Those colours are applying in the measurements pages.

Colour	Default colour
Yellow	Phase 3
Orange	
Red	
Green	
Light blue	Phase 2
Dark blue	
Purple	Phase 1
Brown	
Light grey	
Dark grey	
Black	

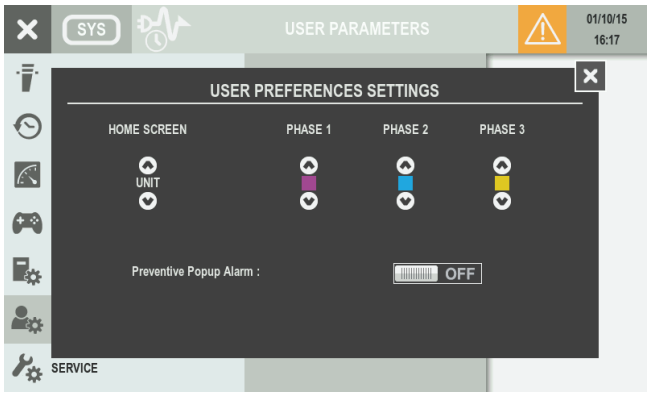

The popup alarm appears in case of critical alarms. This function can be extended to preventive alarms by switching “Preventive Popup Alarm” to ON.

9. OPERATING PROCEDURES

⚠	NOTE: before carrying out any operations on the unit read the 'Safety standards' chapter carefully.
⚠	NOTE: with the stop procedure the load will be disconnected.

9.1 SWITCHING ON

- Connect the mains and auxiliary mains to the UPS.
- Switch **ON** input switch **Q1**.
- Wait until display switch on.
- Enter **MAIN MENU > CONTROLS > UPS PROCEDURE**.
- Select **START PROCEDURE** and press **ENTER**.
- Carry out the operations indicated on the display.

9.2 SWITCHING OFF

This operation interrupts the power supply to the load. The UPS and the battery charger will be shut down.

- Enter menu **MAIN MENU > CONTROLS > UPS PROCEDURE**.
- Select **STOP** and press **ENTER**.
- Wait approx. 2 minutes for the UPS shutdown.

⚠	NOTE: the controlled shutdown of each server connected to the LAN can be managed by shutdown software.

- Carry out the operations indicated on the display.

9.3 BYPASS OPERATIONS

SWITCHING ONTO MAINTENANCE BYPASS

This operation creates a direct connection between the UPS input and output, excluding the equipment control part. This operation is performed in the event of:

- standard maintenance.
- serious failure has occurred.

⚠	WARNING! LOAD POWERED BY AUX MAINS: your load is exposed to mains disturbances.

- Enter **MAIN MENU > CONTROLS > UPS PROCEDURE**.
- Select **ON MAINTENANCE BYPASS** and press **ENTER**.
- Carry out the operations indicated on the display.

⚠	NOTE! When an external maintenance bypass is present: - carry out the procedure described above; - put the switch to position 1.

SWITCHING ON FROM MAINTENANCE BYPASS

- Put switch **Q1** into position **1** (mains ON).
- Wait for the display to switch on.
- Enter **MAIN MENU > CONTROLS > UPS PROCEDURE**.
- Select **START PROCEDURE** and press **ENTER**.
- Carry out the operations indicated on the display.

⚠	NOTE! **When an external maintenance bypass[1] is present, put the switch to position 0 (OFF).**

1. Not monitored by the UPS or by the parallel system.

9.4 EXTENDED OUT OF SERVICE

When the UPS is deactivated for some time, the batteries must be recharged regularly.

They should be recharged every three months.

- Check that output switches **Q3** and **Q5** are **OFF**.
- Connect the mains and auxiliary mains to the UPS.
- Switch **ON** input switch **Q1**.
- Wait until displays switch on.
- Close the external battery breaker/fuses.
- Wait until the batteries are fully charged. Check in the menu **MAIN MENU** > **MEASUREMENTS** > **BATTERY MEASUREMENTS**.
- Open the external battery breaker/fuses.
- Switch **OFF** input switch **Q1**.

9.5 EMERGENCY SHUTDOWN

⚠	NOTE! **This operations interrupts the supply to the output load from both inverters and automatic bypass.**
⚠	**If the UPS is operating from the maintenance bypass with the mains present, the emergency shutdown does not interrupt the power supply to the load. In emergency conditions all power supplies upstream of the UPS must be disconnected.**

UPS POWER OFF

Put **Q3** to position 0 when it's necessary to interrupt the power supply quickly.

REMOTE UPS POWER OFF

It is possible to interrupt the power supply to the output load using the ADC+SL card. Refer to 'Standard features and option' chapter.

10. OPERATING MODES

10.1 ON LINE MODE

A special feature of the UPS is the ONLINE double conversion in conjunction with low distortion mains power absorption. In ON LINE mode, the UPS can supply a voltage that is fully stabilised in frequency and amplitude, regardless of any interference in the mains power supply, within the most stringent classification of UPS regulations.

ONLINE operation provides three operating modes according to mains and load conditions:

- Inverter mode

This is the most frequent operating condition: energy is drawn from the primary mains power supply and converted and used by the inverter to generate the output voltage to power the connected loads.

The inverter is constantly synchronised in frequency with the auxiliary mains to enable load transfer (due to an overload or inverter shutdown) without any break in the power supply to the load.

The battery charger supplies the energy required to maintain or recharge the battery.

- Bypass mode

In the event of inverter failure, the load is automatically transferred onto the auxiliary mains without any interruption in the power supply.

This procedure may occur in the following situations:

- in the event of a temporary overload, the inverter continues to power the load. If the condition persists, the UPS output is switched.
- on to the auxiliary mains via automatic bypass. Normal operation, which is from the inverter, returns automatically a few seconds after the overload disappears.
- when the voltage generated by the inverter goes outside the limits due to a major overload or a fault on the inverter.
- when the internal temperature exceeds the maximum value allowed.

- Battery mode

In the event of a mains failure (micro interruptions or extended power cuts), the UPS continues to power the load using the energy stored in the battery.

10.2 HIGH EFFICIENCY MODE

The UPS has a selectable, programmable economy operating mode (ECO MODE) that can increase overall efficiency by up to 99% for energy saving purposes. If the power supply fails, the UPS will automatically switch onto the inverter and continue to supply power to the load by drawing energy from the battery.

This mode does not provide perfect stability in frequency and voltage like the NORMAL MODE. Therefore the use of this mode should be carefully evaluated according to the level of protection required by the application. With the optional board Net Vision specific daily or weekly time intervals can be selected and programmed to power applications directly from the auxiliary mains.

ECO MODE operation provides very high efficiency, since the application is powered directly from the auxiliary mains via the automatic bypass under normal operating conditions.

To activate follow the correct procedure in the control panel.

10.3 CONVERTER MODE

In converter mode the UPS can supply a fully stabilised sinusoidal output voltage with a different frequency from the input power line (50 Hz or 60 Hz is available as output frequency value).

⚠	**NOTE: only set this mode on UPS units with the auxiliary mains (AUX MAINS) disconnected! Do not set this mode on UPS units with common mains lines as it could damage the load!**

10.4 OPERATION WITH MAINTENANCE BYPASS

If the internal maintenance bypass is activated using the appropriate procedure, the load is powered directly from the maintenance bypass, while the UPS is separated from the power supply and can be switched off.

This operating mode can be selected for maintenance to be carried out on the system, so that the necessary actions can be performed by service personnel without having to disconnect the power supply to the load.

10.5 OPERATION WITH MOTOR GENERATOR (GENSET)

The UPS can be operated in conjunction with a generator (GENSET) over the ADC+SL card (refer to 'Standard features and option' chapter). With a generator, the frequency and voltage ranges of the auxiliary mains can be increased to accept the instability of the GENSET and at the same time to avoid operation from the battery or risks of out-of-synchronisation switching on to the bypass.

11. STANDARD FEATURES AND OPTION

Availability	
●	*Factory-installed option*
○	*Available as option*
–	*Not available*

Features	MASTERYS GP4			Note
	60-80 kVA	100-120 kVA	160 kVA	
Battery Option				
Additional charger	●○	●○	●○	
Communication Option				
ACS card	●○	●○	●○	
ADC+SL card	○	○	○	
Temperature sensor	○	○	○	⚠ ❗ ADC+SL card
Remote touchscreen display	○	○	○	⚠ ❗ ADC+SL card
BACnet card	○	○	○	
Modbus TCP card	○	○	○	
Net Vision card	○	○	○	
EMD	○	○	○	⚠ ❗ Net Vision card
Electrical Option				
External Isolation Transformer	–	○	–	
IMD	–	○	–	⚠ ❗ External Isolation Transformer
External Maintenance Bypass	○	○	–	
Ground Neutral	●○	●○	●○	⚠ ⊘ Neutral Kit
Internal Backfeed Protection	●	●	●	
Kit For Common Mains	○	○	○	⚠ ⊘ Neutral Kit
Neutral Kit	●	●	●	⚠ ⊘ Ground Neutral ⊘ Kit For Common Mains
Redundant Bypass Ventilation	●	●	●	
Mechanical Option				
Anti-intrusion installation kit	●	●	●	
IP21	○	○	○	⚠ ⊘ Top air exhausted ⊘ Top entry cables
Seismic adaptation kit	●	●	●	⚠ ⊘ Top entry cables
"T" cabinet	–	●	–	
Top air exhausted	–	●	●	⚠ ❗ "T" cabinet ⊘ IP21 ⊘ Top entry cables
Top entry cables	–	○	○	⚠ ❗ "T" cabinet ⊘ Seismic adaptation kit ⊘ IP21 ⊘ Top air exhausted

❗ *Required option*
⊘ *Incompatible option*

11.1 ADC+SL CARD

The ADC+SL (Advanced Dry Contact + Serial Link) is a slot optional board that provides:

- 4 relays for external device activation (can be set as normally closed or normally open).
- 3 free inputs to report external contacts to UPS.
- 1 connector for external battery temperature sensor (optional).
- RS485 insulated serial link providing MODBUS RTU protocol.
- 2 LEDs indicating board status.

The board is plug&play: the UPS is able to recognise its presence and configuration (up to 4 standard operating modes can be selected by the display) and manages the ADC+SL outputs and the inputs accordingly. It is possible to create a custom operation mode through after sales service.

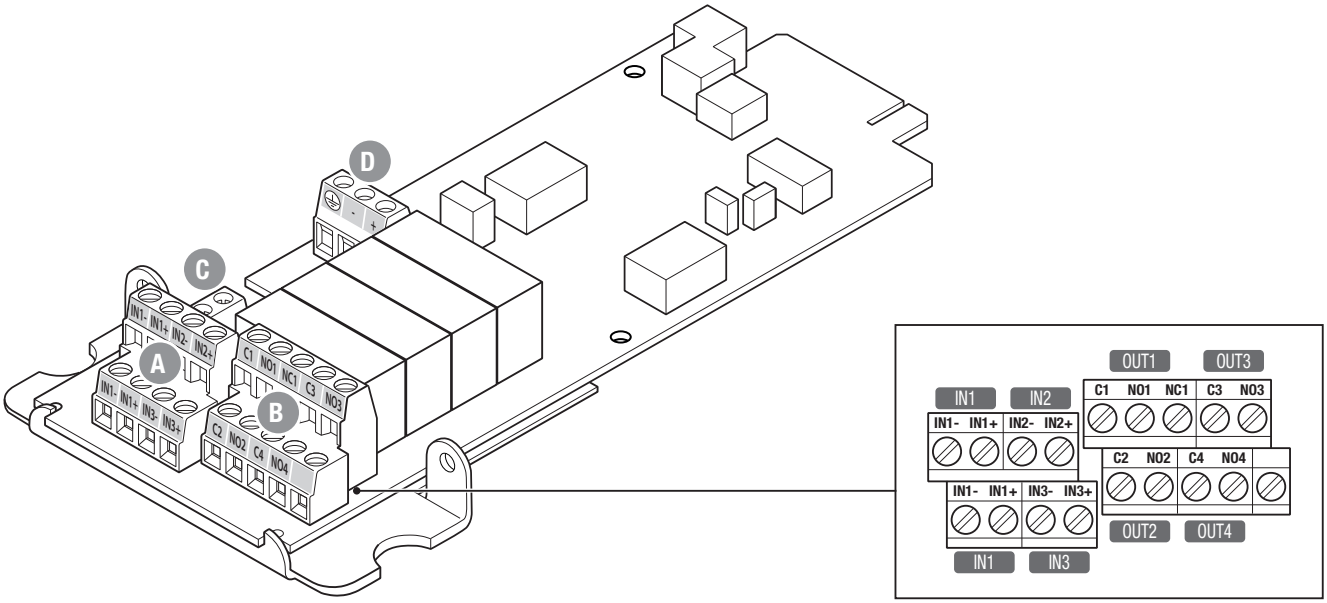

KEY

A 3 free inputs to link external contacts to UPS.

B 4 relays for external device activation.

C 1 connector for external temperature sensor.

D RS485 insulated serial link.

⚠	NOTE! **If the board is removed while operating, an alarm is flagged on the control panel.** **Perform an “Alarm reset” control to cancel it.**

INPUT

- Free voltage loop.
- INx+ has to be connected to INx- to close the loop on XB4 connector.
- Inputs must be isolated with basic insulation from a primary circuit up to 277 V.
- IN1 is duplicated, giving the possibility to link the UPS POWER OFF signal to other equipment, for example.

RELAY OUTPUTS

- Contact voltage guaranteed at 277 V (AC) / 25 V (DC) – 4 A (for higher voltage, please contact the manufacturer).
- Relay 1 gives the possibility of choosing between normally closed (NC1) or normally open (NO1) position. Relays 2, 3 and 4 only have normally open position (NOx).
- On connector XB3, Cx means common, NOx means normally open position.

STANDARD configuration (default)					
IN/OUT	DESCRIPTION	ACTIVATION DELAY (s)	REMARK(1)	INPUT TYPE	STATE
IN1	UPS POWER OFF	1	Command sent to UPS(2)	Close to activate	Normally open
IN2	GEN SET ON	1	Activate S023 status	Open to activate	Normally closed
IN3	INSULATION FAULT	10	Activate A026	Open to activate	Normally closed
RELAY 1	GENERAL ALARM	10	(NC1 or NO1 position can be chosen) Relating to A015		Normally open/closed
RELAY 2	OPERATING ON BATTERY	30	Relating to A019		Normally open
RELAY 3	END OF BACK-UP TIME	10	Relating to A017		Normally open
	IMMINENT STOP	10	Relating to A000		Normally open
RELAY 4	LOAD SUPPLIED BY AUTO-MATIC BYPASS	10	Relating to S002		Normally open

OPTIONS SUPERVISOR configuration					
IN/OUT	DESCRIPTION	ACTIVATION DELAY (s)	REMARK(1)	INPUT TYPE	STATE
IN1	UPS POWER OFF	1	Command sent to UPS(2)	Close to activate	Normally open
IN2	FAN FAILURE	10	Activate A054	Close to activate	Normally open
IN3	BATTERY DISCONNECTED	10	Activate A016	Open to activate	Normally closed
RELAY 1	GENERAL ALARM	10	(NC1 or NO1 position can be chosen) Relating to A015		Normally open/closed
RELAY 2	OPERATING ON BATTERY	30	Relating to A019		Normally open
RELAY 3	REDUNDANCY LOST	10	Relating to A006		Normally open
RELAY 4	BATTERY DISCONNECTED	1	Relating to A016		Normally open

SAFETY configuration					
IN/OUT	DESCRIPTION	ACTIVATION DELAY (s)	REMARK(1)	INPUT TYPE	STATE
IN1	UPS POWER OFF	1	Command sent to UPS(2)	Close to activate	Normally open
IN2	INSULATION FAULT	1	Activate A026	Open to activate	Normally closed
IN3	CHARGER DISABLE/ENABLE	10	Command sent to UPS(2)	Open to activate	Normally closed
RELAY 1	GENERAL ALARM	10	(NC1 or NO1 position can be chosen) Relating to A015		Normally open/closed
RELAY 2	UPS POWER OFF	1	Relating to A059		Normally open
RELAY 3	END OF BACK-UP TIME	10	Relating to A017		Normally open
	IMMINENT STOP	10	Relating to A000		Normally open
RELAY 4	LOAD SUPPLIED BY AUTO-MATIC BYPASS	1	Relating to S002		Normally open

ENVIRONMENTAL configuration					
IN/OUT	DESCRIPTION	ACTIVATION DELAY (s)	REMARK(1)	INPUT TYPE	STATE
IN1	UPS POWER OFF	1	Command sent to UPS(2)	Close to activate	Normally open
IN2	PROGRAMMABLE ALARM	10	Activate A064	Open to activate	Normally closed
IN3	BATTERY TEMPERATURE ALARM	10	Activate A020	Open to activate	Normally closed
RELAY 1	GENERAL ALARM	10	(NC1 or NO1 position can be chosen) Relating to A015		Normally open/closed
RELAY 2	BATTERY TEMPERATURE ALARM	10	Relating to A020		Normally open
RELAY 3	REDUNDANCY LOST	10	Relating to A006		Normally open
RELAY 4	PROGRAMMABLE ALARM	10	Relating to A064		Normally open

EXTERNAL MAINTENANCE BYPASS configuration					
IN/OUT	DESCRIPTION	ACTIVATION DELAY (s)	REMARK(1)	INPUT TYPE	STATE
IN1	UPS POWER OFF	1	Command sent to UPS(2)	Close to activate	Normally open
IN2	GEN SET ON	1	Activate S023 status	Open to activate	Normally closed
IN3	EXTERNAL MAINTENANCE BYPASS CLOSED	10	Activate S018 status	Open to activate	Normally closed
RELAY 1	GENERAL ALARM	10	(NC1 or NO1 position can be chosen) Relating to A015		Normally open/closed
RELAY 2	OPERATING ON BATTERY	30	Relating to A019		Normally open
RELAY 3	END OF BACK-UP TIME	10	Relating to A017		Normally open
	IMMINENT STOP	10	Relating to A000		Normally open
RELAY 4	LOAD SUPPLIED BY AUTO-MATIC BYPASS	10	Relating to S002		Normally open

1. The acronyms mentioned are linked to MODBUS table (Snnn=Status/Annn=Alarm).

2. A self-locking emergency push button must be used for the UPS Power Off input.

Note: custom configuration is also available. For more information contact Socomec.

RS485 SERIAL LINK

- Insulated RS485, protected against over voltage. Only for local bus purposes; maximum ~500 m.
- Pull up and pull down line resistor XJ1 (failsafe biasing): jumper open by default.
- Possibility of fixing the RS485 cable to the board.
- Cable type required: twister pair cable + shield to connect to ground. (AWG 24, 0.2 mm^2 for example).

The INPUT and RELAYS are managed with information coming from the UPS.

⚠	**NOTE!** **Inputs and relays can be re-programmed depending on requirements.** **Contact your SOCOMEC after-sales service to change Input/Output programming.**

Information coming from inputs can be reported in the UPS database for display on the mimic panel and is accessible on the MODBUS table.

The UPS can manage up to two ADC+SL option cards. The cards can be re-programmed for other uses.

In this specific case, the 2 serial links (SLOT 1 and SLOT 2) are independent.

MODBUS SERIAL LINK

The RS485 provides MODBUS RTU protocol.

The description of MODBUS addresses and UPS database are described in the MODBUS user manual. All manuals are available on SOCOMEC's web site (www.socomec.com).

SERIAL LINK SETTINGS

COM1 relates to serial port on board in SLOT 1.

COM2 relates to serial port on board in SLOT 2.

Settings are available via the mimic panel to configure:

- Baud rate: 2400, 9600, 19200.
- Parity: None, Even, Odd.
- MODBUS slave number: 1 to 32.

BOARD STATUS

Board presence is reported through status S064 for slot 1 and S065 for slot 2.

In the case of board failure, 'Option board alarm' (A062) occurs to prevent malfunctioning.

11.1.1 TEMPERATURE SENSOR

The temperature sensor can be used to monitor the battery temperature.

The ADC+SL card can be ordered with or without the temperature sensor in kit.

If the sensor is present, temperature values are available on MODBUS protocol at following addresses:

Temperature board		
Slot 1	0xn0AF[1]	Format ##
Slot 2	0xn0AE[1]	Format ##

1. n = unit number

Temperature range: 0 °C to 40 °C.

11.2 NET VISION CARD

NET VISION is a communication and management interface designed for business networks. The UPS behaves exactly like a networked peripheral, it can be managed remotely, and allows the shutdown of network workstations.

NET VISION allows a direct interface between the UPS and LAN network avoiding dependence on the server and support SMTP, SNMP, DHCP and many other protocols. It interacts via the web browser.

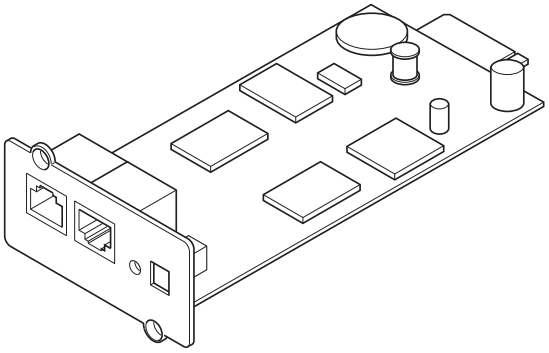

11.2.1 EMD

EMD (Environmental Monitoring Device) is a device to be used in conjunction with the NET VISION interface and provides the following features:

- temperature and humidity measurements + dry contact inputs,
- alarm thresholds configurable via Web browser,
- notification of environmental alarm via email and SNMP traps.

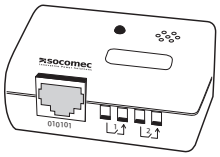

11.3 ACS CARD

ACS (Automatic Cross Synchronisation) card is used to receive a synchronisation signal from an external source and manage it for the UPS where it is installed, and provide a synchronising signal, where requested, to another UPS.

11.4 MODBUS TCP CARD

With the MODBUS TCP card fitted in the options slot, the UPS can be monitored from remote stations using the appropriate protocol (MODBUS TCP - IDA).

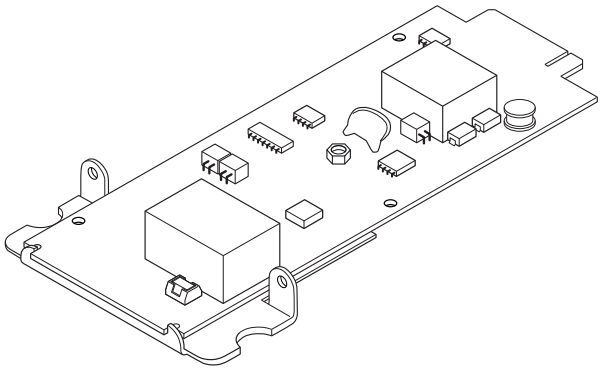

11.5 BACNET CARD

With the BACnet card fitted in the options slot, the UPS can be monitored from remote stations using the appropriate protocol (BACnet - IDA).

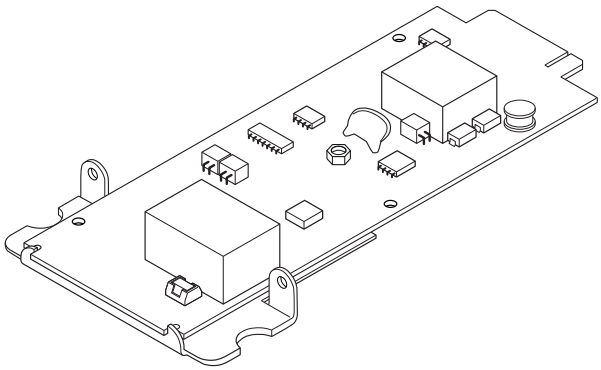

11.6 REMOTE TOUCHSCREEN DISPLAY

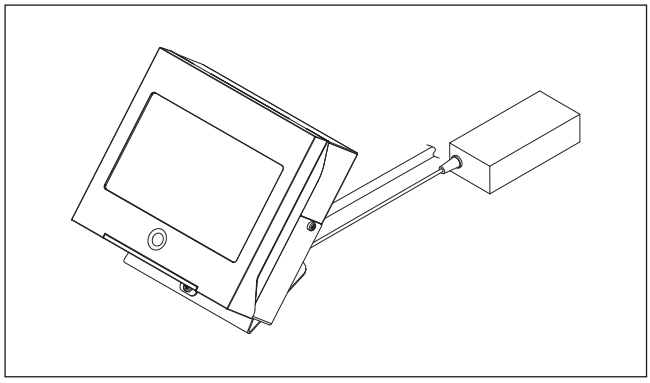

NOTE!
Available only with ADC+SL option card.

11.7 SOFTWARE OPTION

Visit www.socomec.com and enter DOWNLOAD > SOFTWARE > UPS SOFTWARE to find the communication software suitable for your requirements.

NOTE!
Before performing any operations, check that the software is compatible with your UPS model.

11.8 INTERNAL BACKFEED PROTECTION

Internal backfeed protection for Mains and Aux Mains.

The Q1 Mains switch and the Q4 Aux Mains switch have an integrated trip coil directly controlled from the UPS.

11.8.1 60-120 KVA

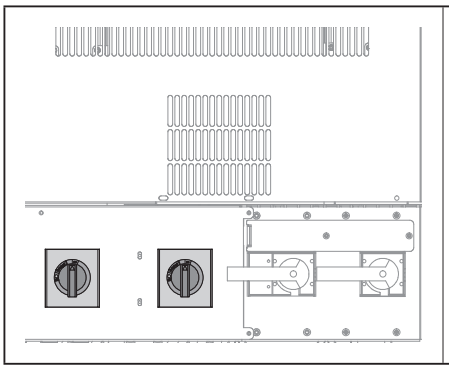

Q1 Mains switch with integrated trip coil.

Q4 Aux Mains switch with integrated trip coil.

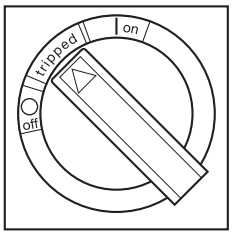

TRIPPED

TRIPPED POSITION for **Q1** or **Q4** when backfeed alarm occurs.

To reset, turn to **OFF** position and then **ON** to restart.

11.8.2 160 KVA

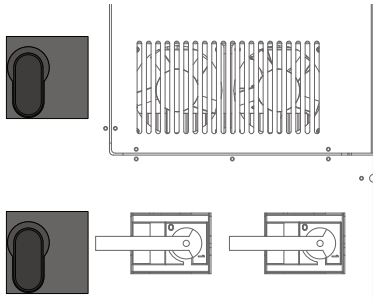	**Q1** Mains switch with integrated trip coil. **Q4** Aux Mains switch with integrated trip coil.
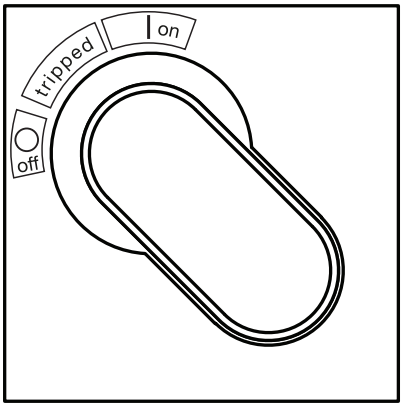 **TRIPPED**	**TRIPPED POSITION** for **Q1** or **Q4** when backfeed alarm occurs. To reset, turn to **OFF** position and then **ON** to restart.

11.9 KIT FOR COMMON MAINS

11.9.1 60-80 KVA

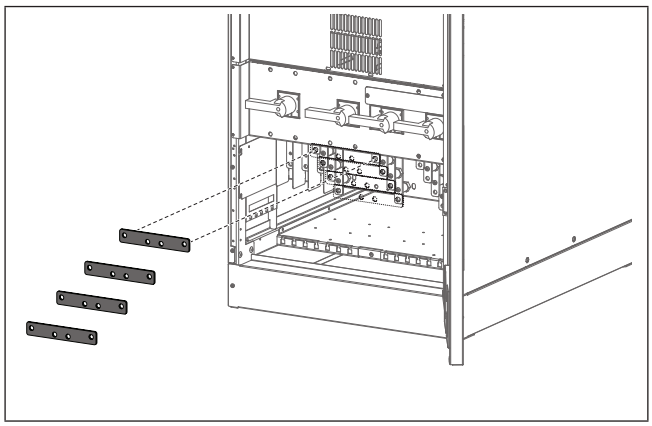

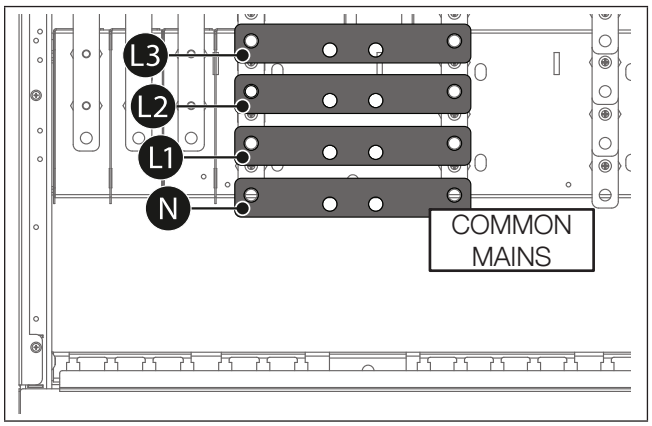

11.9.2 100-120 KVA

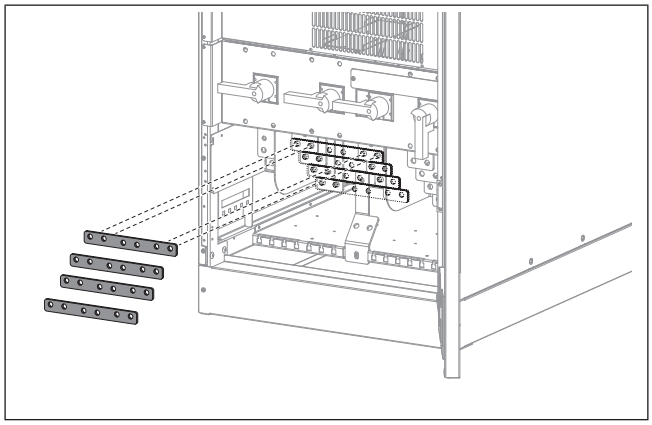

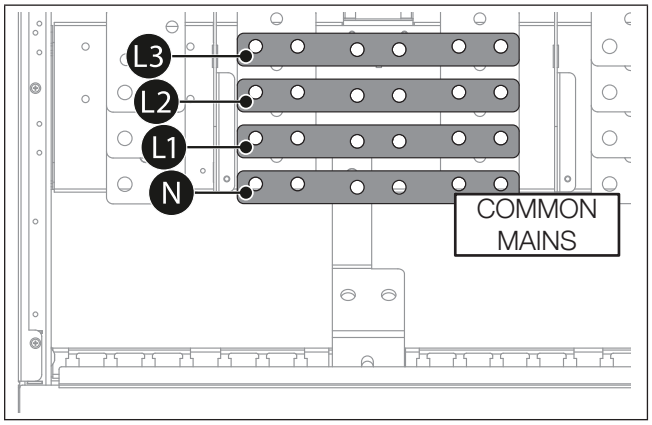

11.9.3 160 KVA

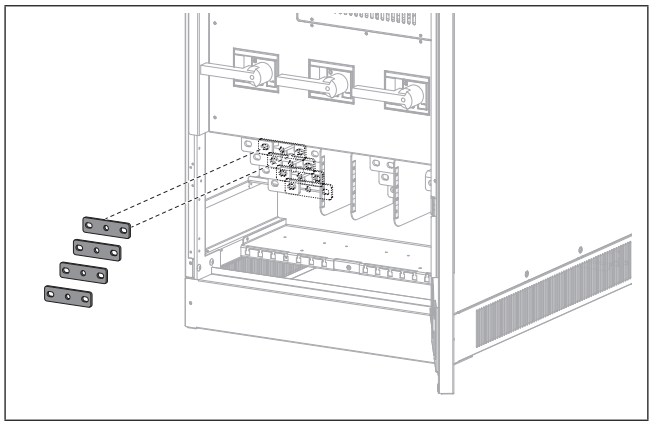

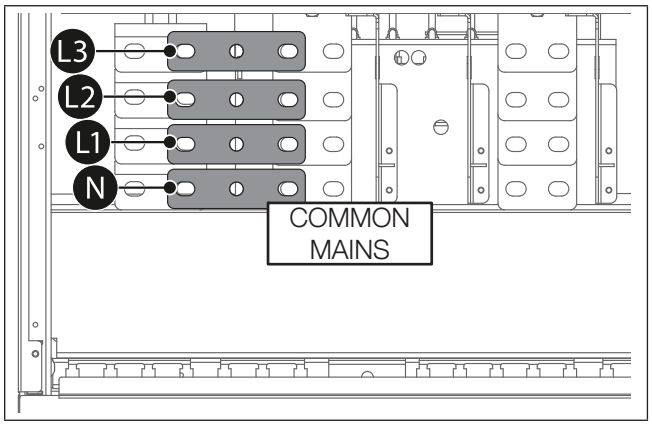

11.10 EXTERNAL MAINTENANCE BYPASS

The external maintenance bypass is designed to provide maximum system availability for critical equipment. It offers the possibility of transferring the load to an alternative power path allowing full isolation of the UPS. In this case the UPS can be turned off and removed without power interruption at the connected loads.

For further information contact SOCOMEC.

11.11 EXTERNAL ISOLATION TRANSFORMER

If an external isolation transformer cabinet is required, the following instructions should be followed:

- Refer to the relevant installation manual.
- See section on Electrical Installation for details about protection.
- The protection cable marked with the ground symbol is connected directly to the distribution panel.
- The transformer can either be connected to the UPS input or output.

⚠	**The UPS must not be operated without the neutral connection to the input.** **The transformer cannot be connected to the output on individual UPS units connected in parallel configuration.**

For connection details refer to the transformer terminal board diagram.

11.11.1 IMD

IMD (Insulation Monitoring Device) is reccomended for IT systems.

11.12 NEUTRAL KIT

For three wire input mains (without neutral) a neutral kit is available as an option. The neutral kit does not change the type of grounding system and it does not create galvanic insulation.

The input mains neutral bar is not available.

⚠	**The input mains and auxiliary mains must be separate.** **The auxiliary mains must always have a neutral wire.** **The auxiliary mains neutral wire must be galvanically isolated from the PE.**

11.13 GROUND NEUTRAL

To deal with different plant needs, a connection bar between Neutral and Protection Earth is available as an option (see figure). For further information contact SOCOMEC.

⚠	**The UPS doesn't assure the continuity of the neutral conductor.** **The output neutral has not to be used as PEN connection for the load.**

11.13.1 TN-C-S CONNECTION

60-80 kVA

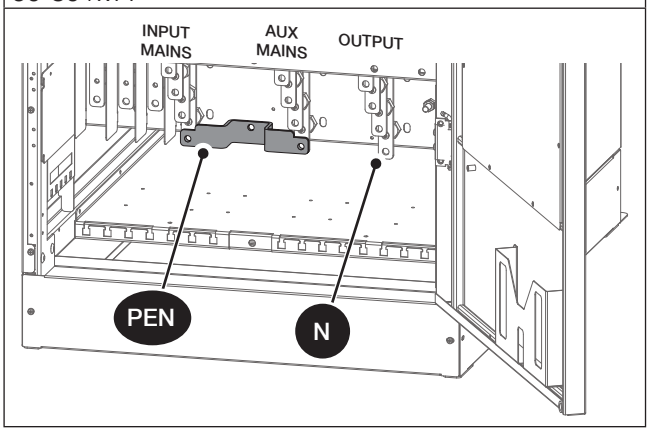

100-120 kVA

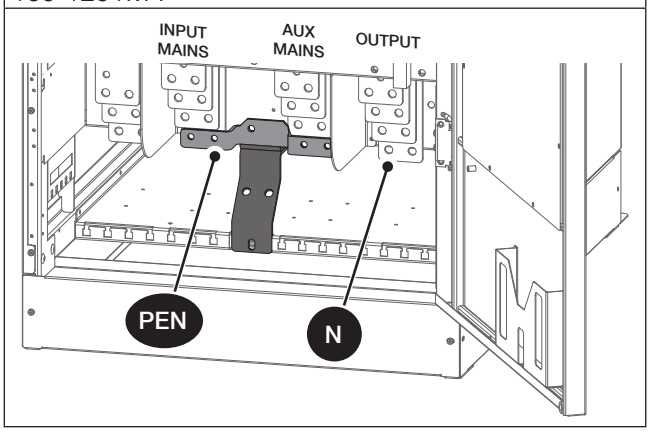

160 kVA

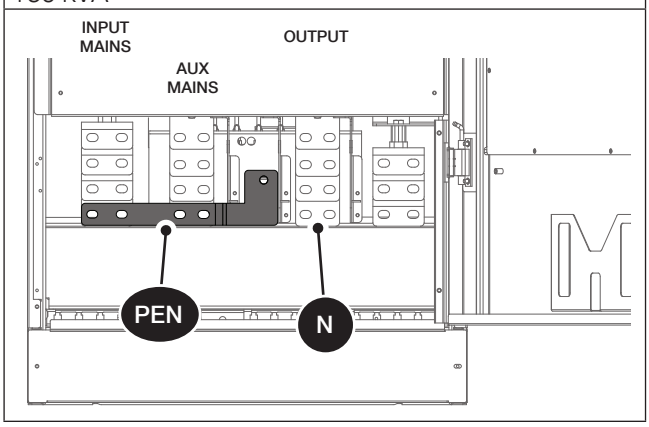

11.13.2 TN-C CONNECTION

60-80 kVA

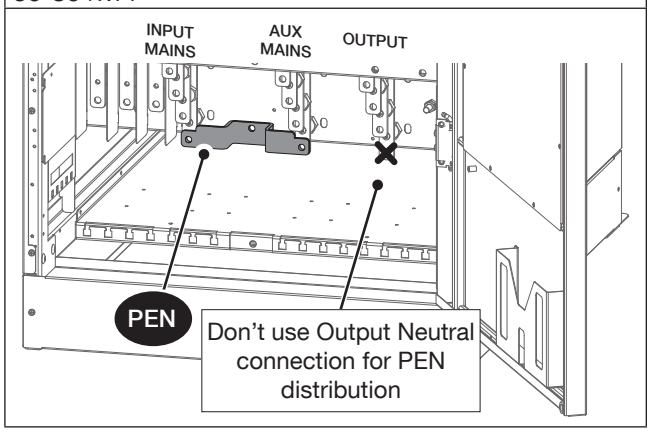

100-120 kVA

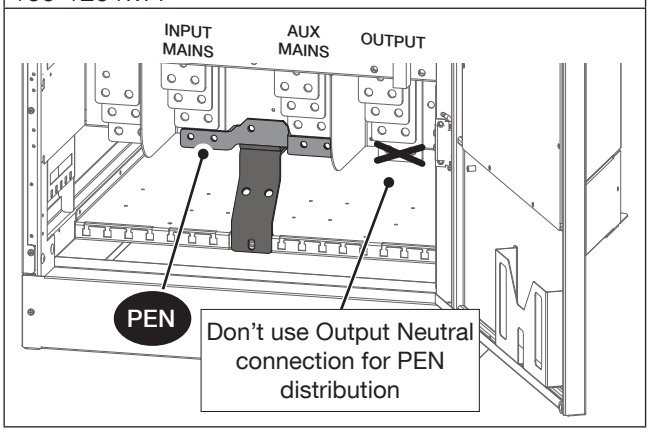

160 kVA

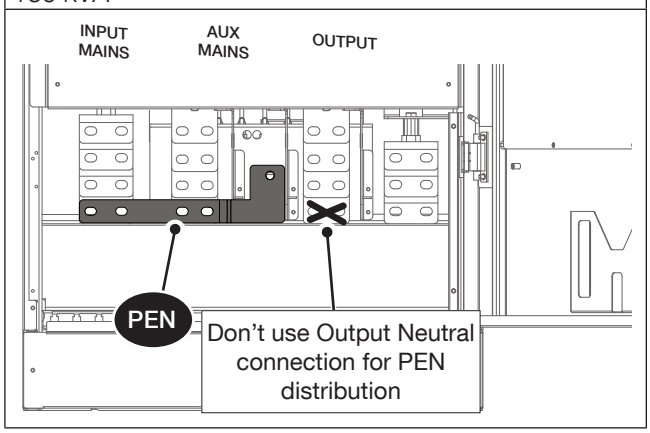

⚠	**The PEN conductor is not allowed in case of unbalanced and third harmonic current circulation.**

11.14 REDUNDANT BYPASS VENTILATION

Redundant ventilation is available as an option to improve the reliability of the Bypass subset.
For further information contact SOCOMEC.

11.15 ANTI-INTRUSION INSTALLATION KIT

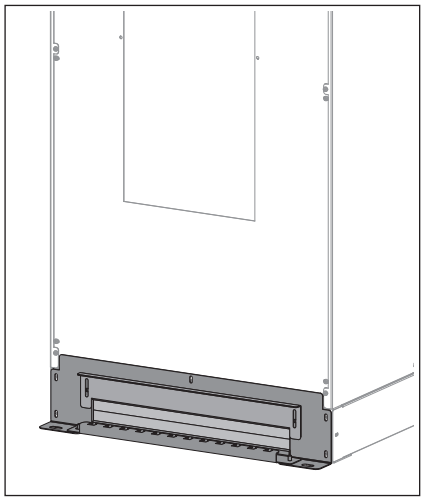

NOTE!
The cables coming from the rear of the unit must pass through the appropriate gap.
This operation must be carried out:
- before wiring operations;
- before securing the kit to the unit and the floor.

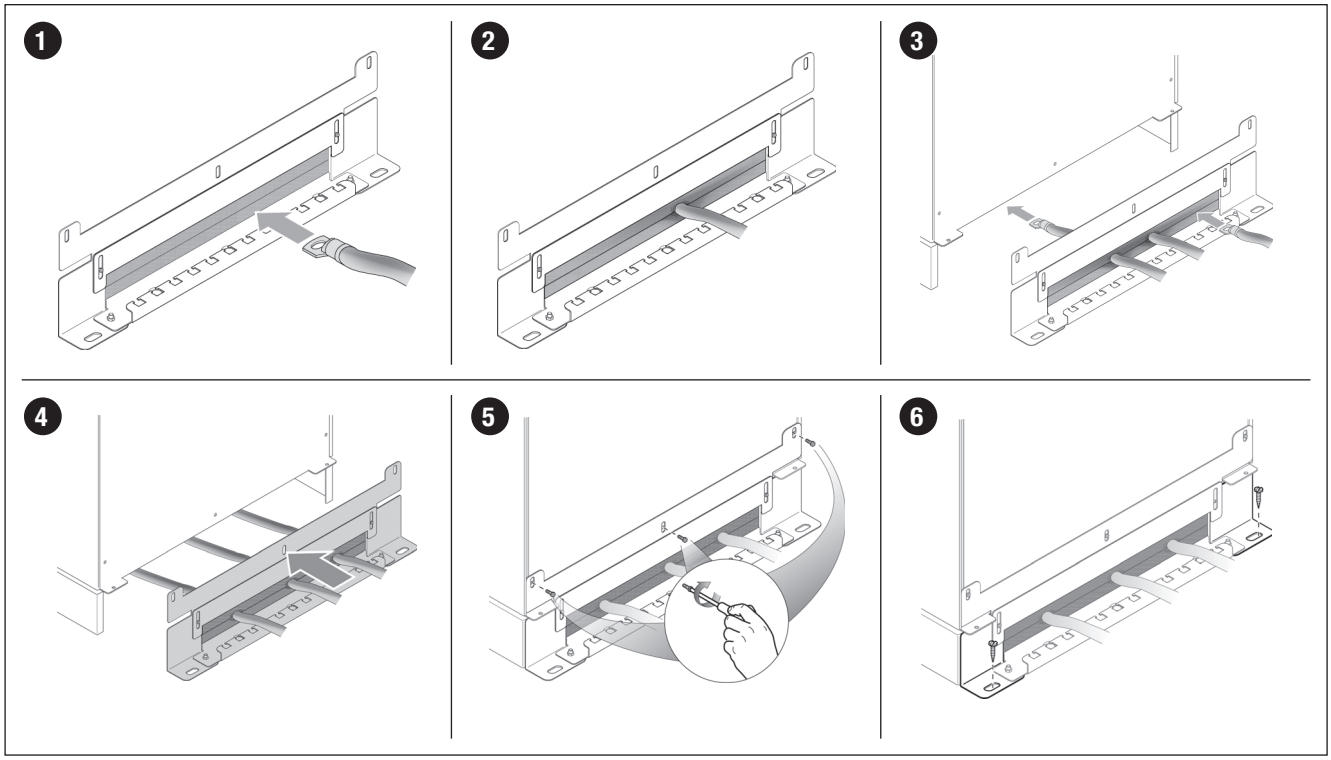

11.16 SEISMIC ADAPTATION KIT

The structure of the UPS is modified to allow it to operate in Zone 4 seismic activity installations (UBC-1997 Zone 4).

11.17 "T" CABINET

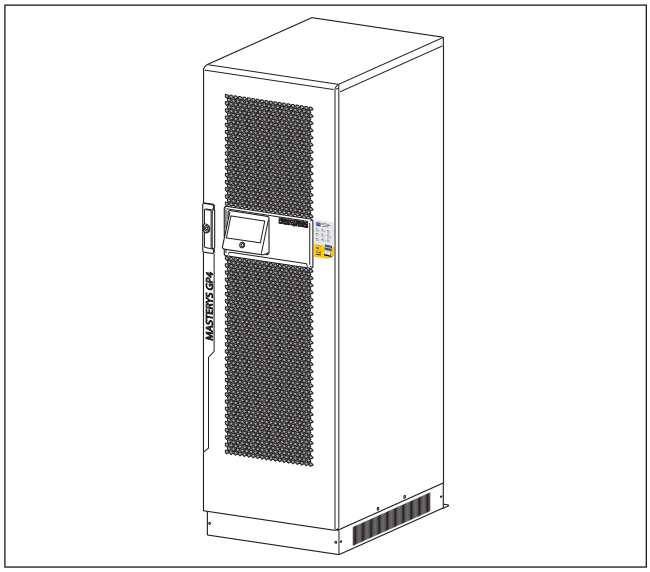

Dimensions (WxDxH)
600 x 855 x 1930 mm

11.18 TOP AIR EXHAUSTED

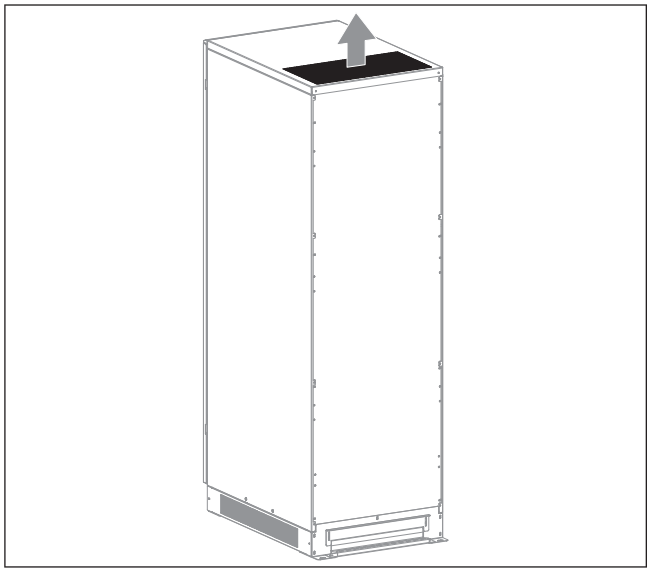

11.19 TOP ENTRY CABLES

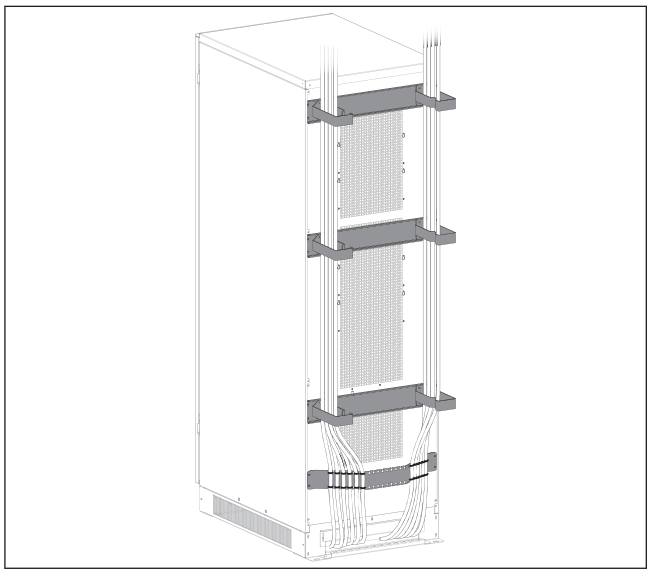

NOTE!
This option can only be used with flexible cables.

Dimensions (WxDxH)
600 x 1040 x 1930 mm

12. TROUBLESHOOTING

The alarm messages displayed enable immediate diagnosis.

Alarms are divided into two categories:

- Alarms relating to external UPS circuits: input mains, output mains, temperature and environment.
- Alarms relating to internal UPS circuits: in this case corrective action will be carried out by the After Sales Department.

The USB report makes it possible to have full information on what occurred. Refer to 'Display operation' chapter.

For other alarms that may appear please contact the Service Dept.

12.1 SYSTEM ALARMS

A000	IMMINENT STOP	An imminent stop is about to happen. In few minutes the UPS will be shut down. This can be caused by a critical alarm or a user request.
A001	OVERLOAD ALARM	The load is exceeding the UPS power specification. The machine will turn off. Reduce the load immediately.
A002	AMBIENT TEMPERATURE ALARM	Environmental temperature is greater than 65°C.
A003	TRANSFER LOCKED	The UPS is unable to transfer the load between bypass and inverter.
A004	TRANSFER IMPOSSIBLE	Bypass is not available.
A005	INSUFFICIENT RESOURCES	At least one SubUnit is not available, which means it is not operational.
A006	REDUNDANCY LOST	The redundant Unit is not available. Check individual unit alarms to locate which is excluded from the System.
A007	OUTPUT SHORT CIRCUIT DETECTION	A short circuit is detected on the output. Please contact the Service Dept.
A008	ECO MODE DISABLED BY UPS	Eco mode is disabled due to bypass failure.
A009	ENERGY SAVER DISABLED BY UPS	An event has occurred forcing the UPS to stop the energy saver function.
A012	MAINTENANCE ALARM	UPS needs routine maintenance (internal counters are reached). Please contact the Service Dept.
A013	REMOTE SERVICE ALARM	UPS needs immediate maintenance. Please contact the Service Dept.
A014	REMOTE SERVICE PREVENTIVE ALARM	A non-critical alarm is present. Please contact the Service Dept.
A015	GENERAL ALARM	An alarm is present.
A016	BATTERY DISCONNECTED	The battery is not connected to the UPS.
A017	BATTERY DISCHARGED	The battery charge level is below the minimum value.
A018	END OF BACK-UP TIME	Supply from batteries is close to finishing.
A019	OPERATING ON BATTERY	The UPS is running on battery. Load is supplied by batteries.
A020	BATTERY TEMPERATURE ALARM	Battery temperature is greater than the threshold. If temperature is measured using ADC+SL, verify NTC is still connected, otherwise, check the internal UPS temperature.
A021	BATTERY ROOM ALARM	The battery cabinet temperature is too high.
A022	BATTERY TEST FAILED	The battery has failed the last battery test.
A026	INSULATION FAULT	Verify input from ADC+SL.
A027	BATTERY ALARM	A battery alarm is present. Maximum recharging time at two levels, or slow discharging time protection has occurred.
A032	RECTIFIER CRITICAL ALARM	There is a problem with the rectifier. Please contact the Service Dept.
A033	RECTIFIER PREVENTIVE ALARM	Preventive maintenance counters are reached. Please contact the Service Dept.

A035	RECTIFIER INPUT SUPPLY NOT OK	The input mains supply is out of tolerance. Verify that the input voltage and frequency are within the UPS ratings.
A037	CHARGER CRITICAL ALARM	There is a problem with the battery charger. Please contact the Service Dept.
A038	CHARGER PREVENTIVE ALARM	Battery charger was blocked by a critical alarm, or Battery Voltage is too low after 16 hours of charging.
A040	INVERTER CRITICAL ALARM	There is a problem with the inverter. Please contact the Service Dept.
A041	INVERTER PREVENTIVE ALARM	There is a non-critical problem with the inverter. Check the fans are working properly. Please contact the Service Dept.
A043	INVERTER IMMINENT STOP	Imminent redundancy was lost due to overload, unit imminent stop, etc.
A046	PARALLEL BOARD CRITICAL ALARM	There is a problem with the Parallel Board. Check the PowerLink connections, otherwise, please contact the Service Dept.
A047	PARALLEL BOARD PREVENTIVE ALARM	There is a non-critical problem with the Parallel Board. Check the Power Link connections, otherwise, please contact the Service Dept.
A048	BYPASS CRITICAL ALARM	There is a problem with the bypass. Please contact the Service Dept.
A049	BYPASS PREVENTIVE ALARM	There is a non-critical problem with the bypass. Please contact the Service Dept.
A050	BYPASS INPUT SUPPLY NOT OK	The auxiliary supply is out of tolerance. Verify that the input voltage and frequency are within the UPS ratings.
A051	PHASE ROTATION FAULT	The auxiliary mains is not connected properly. Please check phase connection order is correct.
A052	BYPASS BACK-FEED DETECTION	There is a backfeed problem with the bypass. Please contact the Service Dept.
A054	FAN FAILURE	Fan Failure can generate overheating. Please contact the Service Dept.
A055	ACS ALARM	Communication between ACS and Inverter is lost.
A056	MAINTENANCE BYPASS ALARM	Output and Maintenance ByPass switches are closed at the same time.
A057	INTERNAL BACKFEED DETECTION	There is a backfeed problem with the rectifier. Please contact the Service Dept.
A059	UPS POWER OFF	The UPO emergency input on ADC+SL has been activated.
A060	WRONG CONFIGURATION	UPS is not configured properly. Please check the configurations or contact the Service Dept.
A061	INTERNAL / COMMUNICATION FAILURE	The internal communication between Boost and Inverter is lost. Please contact the Service Dept.
A062	OPTION BOARD ALARM	There is a communication problem with the option board. Please contact the Service Dept.
A063	SPARE PARTS NOT COMPATIBLE	Spare parts are not registered on the UPS or are not compatible.

12.2 SYSTEM STATUS

S002	LOAD SUPPLIED BY AUTOMATIC BYPASS	Load on bypass, supplied by auxiliary mains. Load not protected.
S018	EXTERNAL MAINTENANCE BYPASS CLOSED	External maintenance bypass input.
S023	GEN SET ON	Genset input.
S064	CARD IN SLOT 1 PRESENT	
S065	CARD IN SLOT 2 PRESENT	
S066	CARD IN SLOT 3 PRESENT	

13. PREVENTIVE MAINTENANCE

⚠	**NOTE: before carrying out any operations on the unit read the 'Safety standards' chapter carefully.**
⚠	**NOTE: any work carried out on the equipment must be performed by qualified technicians authorised by SOCOMEC.**

Routine maintenance carried out annually is recommended in order to provide optimum operating efficiency and avoid equipment downtime.

Maintenance consists of thorough functionality checks on:

- electronic and mechanical parts;
- dust removal;
- battery inspection;
- software updating;
- environmental checks.

13.1 BATTERIES

The condition of the battery is fundamental to UPS operation.

During the operating lifetime of the battery, the UPS stores statistics on the conditions of use of the battery for analysis.

Expected battery lifetime is very much dependent on operating conditions:

- number of charging and discharging cycles;
- load rate;
- temperature.

⚠	**NOTE: batteries must only be replaced with batteries recommended or sold by the manufacturer. Batteries must only be replaced by qualified technicians.**
⚠	**BEWARE: used batteries contain harmful substances. Do not open the plastic cover!**
⚠	**NOTE: used batteries must be placed in appropriate containers to avoid acid leakage. They should only be entrusted to a specialist waste disposal company.**

13.2 FANS & CAPACITORS

The lifespan of consumable parts such as fans and capacitors (AC and DC) depends on whether or not the use and environmental conditions (premises, usage or load type) are abnormal or harsh for the equipment.

It is advisable to replace consumables as follows[1]:

Consumable part	Years
Fan	5
AC and DC capacitor	7

1. Based on operation of the unit according to the manufacturer's specification.

14. SAFEGUARDING THE ENVIRONMENT

Do not dispose of electrical appliances with normal waste, use separate collection facilities.

Follow local council waste regulations for proper disposal arrangements to reduce the environmental impact of waste electrical and electronic equipment or contact your local government for information regarding the collection arrangements available.

If electrical appliances are disposed of in landfills or dumps, hazardous substances can leak into the groundwater and get into the food chain, damaging health and wellbeing. Depleted batteries are considered as toxic waste. When battery replacement becomes necessary, only give rundown batteries to certified and licensed waste disposal companies. In accordance with local legislation, it is prohibited to dispose of batteries together with other industrial waste or household refuse.

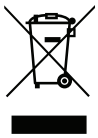

The crossed-out trash bin symbol is placed on this product to encourage users to recycle components and units whenever possible. Please be environmentally responsible and recycle this product through your recycling facility at the end of its lifetime.

For any questions regarding the disposal of the product, contact local distributors or retailers.

15. TECHNICAL SPECIFICATIONS

Models			MASTERYS GP4				
			60 kVA	80 kVA	100 kVA	120 kVA	160 kVA
Electrical specifications - Input							
Mains voltage		Vin	3ph + N 400 Vac (-15/+20%) up to -40% @ 70% of nominal load				
Input frequency		Hz	50-60 ±10%				
Input power factor			≥ 0.99				
Current distortion (THDi)			≤ 2% (@: Pn, Resistive load, Mains THDv ≤ 1%)				
Electrical specifications - External battery							
Battery voltage range		V bat	from +/- 200[3] up to +/- 330[4]				
Electrical specifications - Output							
Output voltage		V	3Ph+N 380/400/415 V ±1%[1]				
Output frequency		Hz	50-60 Hz (selectable) ±0.01%				
Nominal apparent power		kVA	60	80	100	120	160
Nominal active power		kW	60	80	100	120	160
Overload (@ 25 °C; Vin > 380)[2]	10 minutes	kW	75	100	125	150	200
	1 minute		90	120	150	180	240
Crest factor			≥ 2.7				
Voltage distortion (THDv)			≤ 1% (@: Pn, Resistive load) ≤ 5% (@: Sn, non-linear load)				
Electrical specifications - Bypass							
Bypass input voltage		V	Nominal output voltage ±15% (±20% if GENSET is used)				
Bypass input frequency		Hz	50-60 ±2% selectable (±8% if GENSET is used)				
Environment							
Operating temperature		°C	0-40 (15-25 recommended)				
Storage temperature		°C	-5 to 50				
Relative humidity		%	up to 95% (condensation-free)				
Max. altitude		m	1000 (without derating)				
Acoustic noise (@ 70% Pn)		dBA	53		55		57
Cooling type			Air cooling				
Required cooling capacity		m^3/h	480	720	840	1080	1440
Dissipated power max at Pn nominal condition		W	2880	3950	4800	5940	8000
		BTU/h	9833	13486	16388	20280	27297
Dissipated power max at Pn worst condition		W	3360	4630	5500	6560	9350
		BTU/h	11471	15807	18778	22397	31904
Standards							
Safety			EN 62040-1/A1, EN 60950-1				
Type and performance			EN 62040-3 (VFI-SS-111)				
EMC			EN 62040-2 (Category C3)				
Product certification			CE				
Protective class			Protective Class I				
Touch current			< 1 mA				
Protection level			IP20; IP21 (option)				

Models			MASTERYS GP4				
			60 kVA	80 kVA	100 kVA	120 kVA	160 kVA
Mechanical characteristics							
Dimensions	Width	mm	600				
	Depth	mm	855				
	Height	mm	1400				1930
Weight		kg	174	186	228	240	338

1. 360 V with Pout = 90% Pn.

2. Initial Condition Pout ≤ 80% Pn.

3. @ Battery Fully Discharged. Call SOCOMEC support service.

4. @ Battery Fully Charged. Call SOCOMEC support service.

Socomec: our innovations supporting your energy performance

1 independent manufacturer

3,200 employees worldwide

10 % of sales revenue dedicated to R&D

400 experts dedicated to service provision

Your power management expert

POWER SWITCHING

POWER MONITORING

POWER CONVERSION

EXPERT SERVICES

The specialist for critical applications

- Control, command of LV facilities
- Safety of persons and assets
- Measurement of electrical parameters
- Energy management
- Energy quality
- Energy availability
- Energy storage
- Prevention and repairs
- Measurement and analysis
- Optimisation
- Consultancy, commissioning and training

A worldwide presence

8 production sites
- France (x3)
- Italy
- Tunisia
- India
- China (x2)

27 subsidiaries
- Australia • Belgium • China • France
- Germany • India • Italy • Netherlands
- Poland • Romania • Singapore
- Slovenia • Spain • Switzerland • Thailand
- Tunisia • Turkey • UK • USA

80 countries where our brand is distributed

HEAD OFFICE

SOCOMEC GROUP
SAS SOCOMEC capital 10 633 100 €
R.C.S. Strasbourg B 548 500 149
B.P. 60010 - 1, rue de Westhouse
F-67235 Benfeld Cedex
Tel. +33 3 88 57 41 41 - Fax -33 3 88 57 78 78
info.scp.isd@socomec.com

YOUR DISTRIBUTOR / PARTNER

IOMMASGPXX07-EN 03 10.2018

www.socomec.com

ENERGY SPECIALIST SINCE 1922

socomec
Innovative Power Solutions